Return To HomePage

Return To Staxio Page

WARNING!
Do not use the truck before first reading through the OPERATOR'S MANUAL.

NOTE!
Keep for future reference.

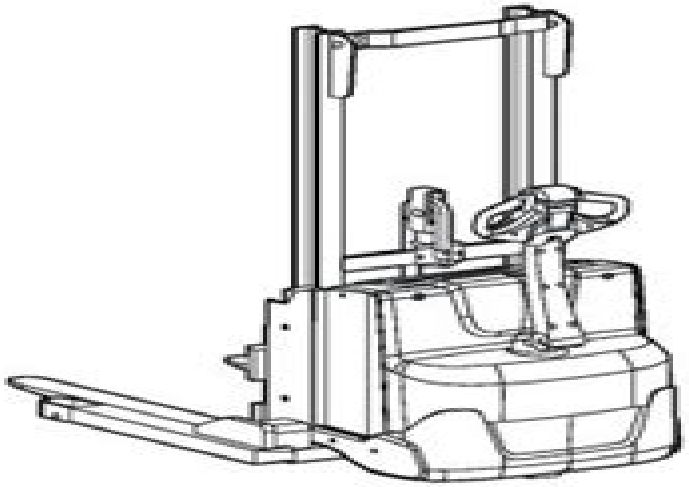

Operator's Manual en

SWE120S

Valid from serial number: 6065409-

Order number: 7504147-040
Issued: 2008-11-24 TP

BT Products AB
S-595 81 MJOLBY SWEDEN

Valid only for serial number:

© BT

Toyota Staxio Manual

John Harold Haynes,Bloomsbury Publishing Plc,Peter Ward

Toyota Staxio Manual:

Toyota Pickup Truck Service Manual ,1982 **Toyota Starlet Owners Workshop Manual** John Harold Haynes,Andrew Kirk Legg,1985 *Toyota Starlet Owners Workshop Manual* J. H. Haynes,A. K. Legg,1986 *Toyota Truck* Toyota Jidōsha Kabushiki Kaisha,1985 Chilton's Repair Manual ,1991 Complete chapter on owner maintenance Expanded index to help you find whatever you want fast All charts up to date with every year of coverage Every subject completely covered in one place where you can find it fast **Clymer Toyota Pickup and 4Runner 2-wheel and 4-wheel Drive ... Shop Manual** ,1989 *Toyota Model-F Repair Manual for Body & Chassis* Toyota Jidōsha Kabushiki Kaisha,1983 *Toyota Land Cruiser Owners Workshop Manual* John Harold Haynes,Bloomsbury Publishing Plc,Peter Ward,1982 **Toyota Starlet Owners Workshop Manual** Tom Schauwecker,1981 **Workshop Manual for Toyota Land Cruiser** Intereurope,1969

Toyota Corona Owners Workshop Manual John Harold Haynes,Peter Ward,1977 **Chilton's Toyota/Lexus Repair Manual 1988-1992** Kerry A. Freeman,1992 Provides step by step instructions **Toyota Granvia 1995-2000** JPNZ (Firm),Toyota New Zealand (Firm),2000 *Toyota Camry Repair Manual* Jay Storer,Chilton Book Company,2006-03-01 Total Car Car is the most complete step by step automotive repair manual you ll ever use All repair procedures are supported by detailed specifications exploded views and photographs Here are just a few of the items in this manual that make your repair jobs easier Expand index to quickly locate information Wiring diagrams Diagnostic charts Troubleshooting charts A glossary to identify those unfamiliar terms Cover p 4 Toyota T & 2T Engine Repair Manual Toyota Jidōsha Hanbai Kabushiki Kaisha. Export-Technical Division,1971 Toyota Camry 2007 thru 2011 Editors of Haynes Manuals,2011-09-15 Haynes offers the best coverage for cars trucks vans SUVs and motorcycles on the market today Each manual contains easy to follow step by step instructions linked to hundreds of photographs and illustrations Included in every manual troubleshooting section to help identify specific problems tips that give valuable short cuts to make the job easier and eliminate the need for special tools notes cautions and warnings for the home mechanic color spark plug diagnosis and an easy to use index

Toyota Camry & Aurion Automotive Repair Manual Geoff Wilson,John Harold Haynes,2014-07-01 This title provides a complete automotive repair manual for the Toyota Camry and Aurion Toyota Hi-Lux Repair Manual ,1983 *Toyota Camry Automotive Repair Manual* Robert Phillip Maddox,John Harold Haynes,1995 1992 thru 1995 all models Toyota Land Cruiser Automotive Repair Manual Jeff Killingsworth,John Harold Haynes,2005-01-01

This is likewise one of the factors by obtaining the soft documents of this **Toyota Staxio Manual** by online. You might not require more era to spend to go to the book inauguration as competently as search for them. In some cases, you likewise complete not discover the notice Toyota Staxio Manual that you are looking for. It will extremely squander the time.

However below, afterward you visit this web page, it will be for that reason unconditionally easy to acquire as competently as download lead Toyota Staxio Manual

It will not understand many become old as we accustom before. You can reach it even if enactment something else at home and even in your workplace. consequently easy! So, are you question? Just exercise just what we allow under as with ease as evaluation **Toyota Staxio Manual** what you as soon as to read!

https://ftp.barnabastoday.com/files/browse/Documents/thematisierungsweisen%20guter%20arbeit%20untersuchung%20jugendwohngruppenarbeit.pdf

Table of Contents Toyota Staxio Manual

1. Understanding the eBook Toyota Staxio Manual
    - The Rise of Digital Reading Toyota Staxio Manual
    - Advantages of eBooks Over Traditional Books
2. Identifying Toyota Staxio Manual
    - Exploring Different Genres
    - Considering Fiction vs. Non-Fiction
    - Determining Your Reading Goals
3. Choosing the Right eBook Platform
    - Popular eBook Platforms
    - Features to Look for in an Toyota Staxio Manual
    - User-Friendly Interface
4. Exploring eBook Recommendations from Toyota Staxio Manual

    - Personalized Recommendations
    - Toyota Staxio Manual User Reviews and Ratings
    - Toyota Staxio Manual and Bestseller Lists
5. Accessing Toyota Staxio Manual Free and Paid eBooks
    - Toyota Staxio Manual Public Domain eBooks
    - Toyota Staxio Manual eBook Subscription Services
    - Toyota Staxio Manual Budget-Friendly Options
6. Navigating Toyota Staxio Manual eBook Formats
    - ePub, PDF, MOBI, and More
    - Toyota Staxio Manual Compatibility with Devices
    - Toyota Staxio Manual Enhanced eBook Features
7. Enhancing Your Reading Experience
    - Adjustable Fonts and Text Sizes of Toyota Staxio Manual
    - Highlighting and Note-Taking Toyota Staxio Manual
    - Interactive Elements Toyota Staxio Manual
8. Staying Engaged with Toyota Staxio Manual
    - Joining Online Reading Communities
    - Participating in Virtual Book Clubs
    - Following Authors and Publishers Toyota Staxio Manual
9. Balancing eBooks and Physical Books Toyota Staxio Manual
    - Benefits of a Digital Library
    - Creating a Diverse Reading Collection Toyota Staxio Manual
10. Overcoming Reading Challenges
    - Dealing with Digital Eye Strain
    - Minimizing Distractions
    - Managing Screen Time
11. Cultivating a Reading Routine Toyota Staxio Manual
    - Setting Reading Goals Toyota Staxio Manual
    - Carving Out Dedicated Reading Time
12. Sourcing Reliable Information of Toyota Staxio Manual

    - Fact-Checking eBook Content of Toyota Staxio Manual
    - Distinguishing Credible Sources
13. Promoting Lifelong Learning
    - Utilizing eBooks for Skill Development
    - Exploring Educational eBooks
14. Embracing eBook Trends
    - Integration of Multimedia Elements
    - Interactive and Gamified eBooks

Toyota Staxio Manual Introduction

Free PDF Books and Manuals for Download: Unlocking Knowledge at Your Fingertips In todays fast-paced digital age, obtaining valuable knowledge has become easier than ever. Thanks to the internet, a vast array of books and manuals are now available for free download in PDF format. Whether you are a student, professional, or simply an avid reader, this treasure trove of downloadable resources offers a wealth of information, conveniently accessible anytime, anywhere. The advent of online libraries and platforms dedicated to sharing knowledge has revolutionized the way we consume information. No longer confined to physical libraries or bookstores, readers can now access an extensive collection of digital books and manuals with just a few clicks. These resources, available in PDF, Microsoft Word, and PowerPoint formats, cater to a wide range of interests, including literature, technology, science, history, and much more. One notable platform where you can explore and download free Toyota Staxio Manual PDF books and manuals is the internets largest free library. Hosted online, this catalog compiles a vast assortment of documents, making it a veritable goldmine of knowledge. With its easy-to-use website interface and customizable PDF generator, this platform offers a user-friendly experience, allowing individuals to effortlessly navigate and access the information they seek. The availability of free PDF books and manuals on this platform demonstrates its commitment to democratizing education and empowering individuals with the tools needed to succeed in their chosen fields. It allows anyone, regardless of their background or financial limitations, to expand their horizons and gain insights from experts in various disciplines. One of the most significant advantages of downloading PDF books and manuals lies in their portability. Unlike physical copies, digital books can be stored and carried on a single device, such as a tablet or smartphone, saving valuable space and weight. This convenience makes it possible for readers to have their entire library at their fingertips, whether they are commuting, traveling, or simply enjoying a lazy afternoon at home. Additionally, digital files are easily searchable, enabling readers to locate specific information within seconds. With a few keystrokes, users can search for keywords, topics, or phrases, making research and finding relevant information a breeze. This efficiency

saves time and effort, streamlining the learning process and allowing individuals to focus on extracting the information they need. Furthermore, the availability of free PDF books and manuals fosters a culture of continuous learning. By removing financial barriers, more people can access educational resources and pursue lifelong learning, contributing to personal growth and professional development. This democratization of knowledge promotes intellectual curiosity and empowers individuals to become lifelong learners, promoting progress and innovation in various fields. It is worth noting that while accessing free Toyota Staxio Manual PDF books and manuals is convenient and cost-effective, it is vital to respect copyright laws and intellectual property rights. Platforms offering free downloads often operate within legal boundaries, ensuring that the materials they provide are either in the public domain or authorized for distribution. By adhering to copyright laws, users can enjoy the benefits of free access to knowledge while supporting the authors and publishers who make these resources available. In conclusion, the availability of Toyota Staxio Manual free PDF books and manuals for download has revolutionized the way we access and consume knowledge. With just a few clicks, individuals can explore a vast collection of resources across different disciplines, all free of charge. This accessibility empowers individuals to become lifelong learners, contributing to personal growth, professional development, and the advancement of society as a whole. So why not unlock a world of knowledge today? Start exploring the vast sea of free PDF books and manuals waiting to be discovered right at your fingertips.

FAQs About Toyota Staxio Manual Books

1. Where can I buy Toyota Staxio Manual books? Bookstores: Physical bookstores like Barnes & Noble, Waterstones, and independent local stores. Online Retailers: Amazon, Book Depository, and various online bookstores offer a wide range of books in physical and digital formats.
2. What are the different book formats available? Hardcover: Sturdy and durable, usually more expensive. Paperback: Cheaper, lighter, and more portable than hardcovers. E-books: Digital books available for e-readers like Kindle or software like Apple Books, Kindle, and Google Play Books.
3. How do I choose a Toyota Staxio Manual book to read? Genres: Consider the genre you enjoy (fiction, non-fiction, mystery, sci-fi, etc.). Recommendations: Ask friends, join book clubs, or explore online reviews and recommendations. Author: If you like a particular author, you might enjoy more of their work.
4. How do I take care of Toyota Staxio Manual books? Storage: Keep them away from direct sunlight and in a dry environment. Handling: Avoid folding pages, use bookmarks, and handle them with clean hands. Cleaning: Gently dust

the covers and pages occasionally.

5. Can I borrow books without buying them? Public Libraries: Local libraries offer a wide range of books for borrowing. Book Swaps: Community book exchanges or online platforms where people exchange books.
6. How can I track my reading progress or manage my book collection? Book Tracking Apps: Goodreads, LibraryThing, and Book Catalogue are popular apps for tracking your reading progress and managing book collections. Spreadsheets: You can create your own spreadsheet to track books read, ratings, and other details.
7. What are Toyota Staxio Manual audiobooks, and where can I find them? Audiobooks: Audio recordings of books, perfect for listening while commuting or multitasking. Platforms: Audible, LibriVox, and Google Play Books offer a wide selection of audiobooks.
8. How do I support authors or the book industry? Buy Books: Purchase books from authors or independent bookstores. Reviews: Leave reviews on platforms like Goodreads or Amazon. Promotion: Share your favorite books on social media or recommend them to friends.
9. Are there book clubs or reading communities I can join? Local Clubs: Check for local book clubs in libraries or community centers. Online Communities: Platforms like Goodreads have virtual book clubs and discussion groups.
10. Can I read Toyota Staxio Manual books for free? Public Domain Books: Many classic books are available for free as theyre in the public domain. Free E-books: Some websites offer free e-books legally, like Project Gutenberg or Open Library.

Find Toyota Staxio Manual :

thematisierungsweisen guter arbeit untersuchung jugendwohngruppenarbeit
theodosia and the staff of osiris
the writers scripture guide help from above wisdom in writing series
~~the world hockey association fact book~~
thermo king md ii max manual
the world they made together black and white values in eighteenth century virginia
~~the world of tolkien mythological sources of the lord of the rings~~
theme 1 theme skills test grade 5
theory of machine 1 lab manual
thekwini college 2015 registration

thermo king thermoguard control panel 6 manual
thermal engineering book by rs khurmi free download
thermo king lrt manual
theory and applications of recent robust methods author mia hubert nov 2004
thermistor for aqa isa 2015

Toyota Staxio Manual :

New Cutting Edge Intermediate Workbook (answer key) New Cutting Edge Intermediate Workbook (answer key) Cutting Edge 3rd Ed: Intermediate | Workbook + Answer Key Description · A strong grammar syllabus develops effective and accurate use of language · High-frequency vocabulary helps students say what they want to say ... Cutting Edge 3rd Ed: Elementary | Workbook + Answer Key Description · A strong grammar syllabus develops effective and accurate use of language · High-frequency vocabulary helps students say what they want to say ... cutting edge 3rd edition intermediate workbook with key Book overview. Cutting Edge 3rd edition edition builds on the task-based learning approach that has made. Cutting Edge so popular. With fresh, new, integrated ... Cutting Edge Pre İntermediate Workbook Key - english Cutting Edge Pre İntermediate Workbook Key ; 51. EAW3 answerkey - Effective Academic Writing 3 Answer key will help your essay writing skill to ; 106. Cutting Edge 3rd Edition Intermediate Workbook + Answer ... This fully-revised edition builds on the task-based learning approach that has made Cutting Edge so popular. With fresh, new, integrated DVD material and ... ZZ:Cutting Edge 3rd Edition Intermediate Workbook with ... The Workbook contains extra practice and exercises with answer key. There is also an audio CD for listening exercises. Paperback. Published January 11, 2013. Cutting Edge | Intermediate Workbook + Answer Key Workbook + Answer Key. ISBN: 9781447906520. Course: Cutting Edge 3rd Edition. Workbook + Answer Key (Intermediate). Cutting Edge 3rd Edition Workbook + Answer ... CUTTING EDGE - Elementary - Third Edition - Workbook CUTTING EDGE - Elementary - Third Edition - Workbook - Free download as PDF File (.pdf) or read online for free. edge. Cutting Edge 3rd Edition Intermediate Workbook with Key Engaging texts new video content and a comprehensive digital package are just some of the features that make this fully revised edition even more effective. BowFlex Product Manuals Misplace your owner's manual? Look no further. Assembly instructions, owners manuals and quick-start guides for BowFlex exercise machines. SOLVED: Instructions for Bowflex WR30M? Apr 13, 2012 — Need Directions for Use for settings for Bowflex WR30M Watch & Wireless Heart - Watches question. ... Full user manual and instructions there to ... Bowflex Wr30m Watch Manual Bowflex Wr30m Watch Manual. Downloaded from web.mei.edu by guest. HOBBS ANTON. Related with Bowflex Wr30m Watch Manual: • Argument Writing Graphic Organizer. Salutron BOWFLEX User Manual View and Download Salutron BOWFLEX user manual online. Strapless Heart Rate Watch & Pedometer. BOWFLEX fitness trackers

pdf manual download. Bowflex Heart Rate Monitor WR30m WR30m user manual Oct 3, 2013 — Manuals and free owners instruction pdf guides. Find the user manual and the help you need for the products you own at ManualsOnline. Bowflex WR30M manual Sep 4, 2013 — Instructions for Bowflex WR30M? In time mode, hold set (bottom right button) to change date and time. The selected (flashing) item can be ... Bowflex Heart Rate Monitor Product Support | ManualsOnline ... I need a manual or instructions for the WR30M watc. Bowflex Heart Rate Monitor wr30m. 0 Solutions. I have a Bowflex watch. And the pulse feature stop. Bowflex ... Amazon.com: Customer Questions & Answers Bowflex Classic Strapless Heart Rate Monitor Watch (Black). Customer Questions ... Q: I have bowflex wr30m.i need instructions how to set everthing. I have a ... WR30 M | PDF | Business INSTRUCTIONS watch face or on the caseback. SPECIAL EXTENDED SPECIAL EXTENDED • Water-Resistant watch withstands water pressure to 60 p.s.i.a.. WARRANTY OFFER ... Business 111: Principles of Supervision Final Exam Test and improve your knowledge of Business 111: Principles of Supervision with fun multiple choice exams you can take online with Study.com. Supervisory Management Quizzes, Questions & Answers Are you ready to test your knowledge and explore the essential skills and concepts of effective supervision? In this quiz, we'll delve into the world of ... Free Supervisory Situational Judgment Test Practice Guide ... On this page, you will find free Supervisory Situational Judgment Test questions along with general test-related information. Supervisor Assessment Test Preparation and Study Guides You will face questions that measure your comprehension of the principles, behaviors and practices of successful supervisors. The focus is on leadership. In the ... Supervision (Test Questions & Answers) Flashcards Study with Quizlet and memorize flashcards containing terms like What refers to defining goals, establishing strategies to achieve them and designing ways ... Supervisor Training Questions Supervisor Training Questions. 1. Effective supervisors a ... By answering these test questions, I confirm that I have completed the Supervision Training. Preparing for the Supervisor 3 Exam: Check Your ... This is an optional self-assessment tool to help you prepare for the Supervisor 3 exam. It does not guarantee success or failure of the Civil Service exam, ... Test exam Safety for Operational Supervisors This examination is comprised of 40 multiple-choice questions. Each question is followed by three possible answers, of which only one is correct. First Line Supervisor Test to Assess and Hire Supervisor This first line supervisor test may contain MCQs (Multiple Choice Questions) ... Mechanical Aptitude - 15 Questions, 17 minutes. Useful for hiring. First Line ...