www.downloadworkshopmanuals.com

PDF

DOWNLOAD

Toyota Corolla

Workshop Service Repair Manual + Wiring Diagrams 2000-2013

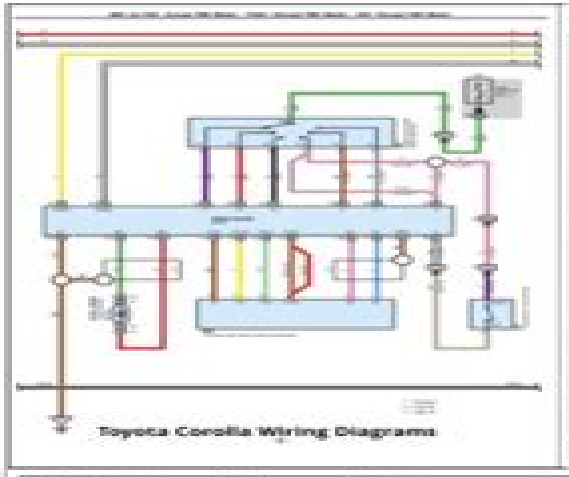

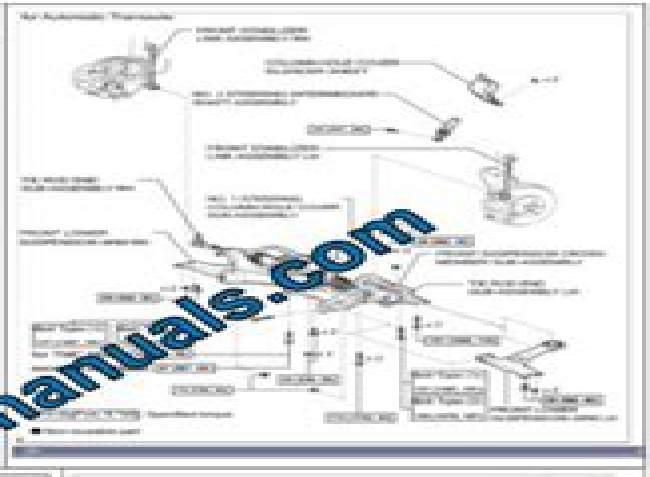

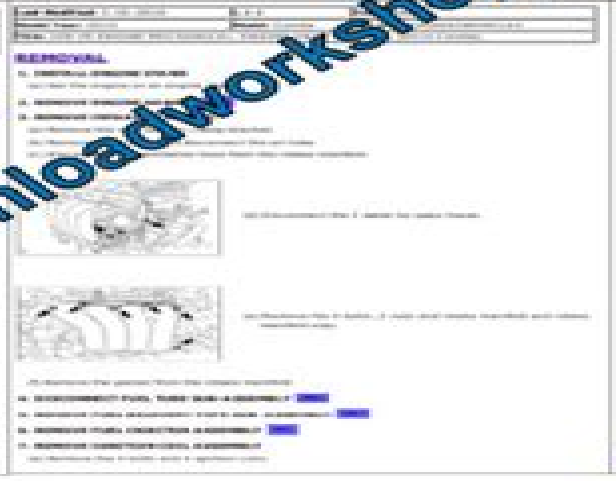

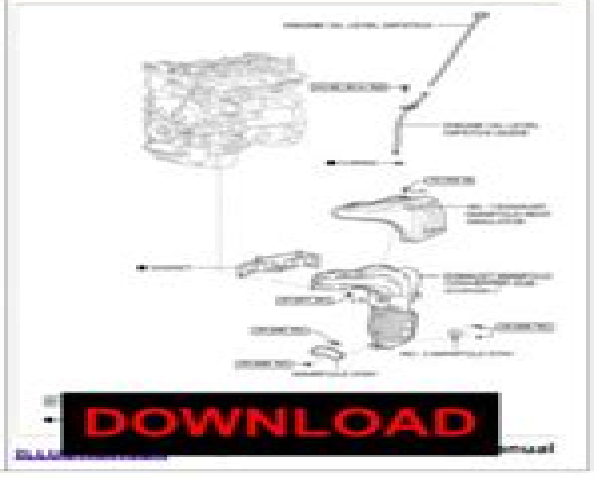

Workshop Manual
EXAMPLE IMAGES

www.downloadworkshopmanuals.com

Official Toyota Corolla 2000-2013 Factory Workshop Manual

Covers all repairs and servicing: Engine, Gearbox, Brakes, Suspension, Steering, Timing, Cooling, Lubrication, Lights, Wiring, charging system, Air conditioning, Diagnostics etc

Toyota Corolla Twincam Repair Manual

N Colangelo

Toyota Corolla Twincam Repair Manual:

Toyota Corolla & Geo Prizm Automotive Repair Manual Jay Storer,John Harold Haynes,1996 Haynes disassembles every subject vehicle and documents every step with thorough instructions and clear photos Haynes repair manuals are used by the pros but written for the do it yourselfer *Toyota Corolla and Geo/Chev Prizm Auto Repair Manual 93-02* John Haynes,2002-07-22 Inside this manual the reader will learn to do routine maintenance tune up procedures engine repair along with aspects of your car such as cooling and heating air conditioning fuel and exhaust emissions control ignition brakes suspension and steering electrical systems wiring diagrams **Toyota Corolla & Geo/Chevrolet Prizm Automotive Repair Manual** Jay Storer,John Harold Haynes,2002 **Toyota Corolla** Alan Ahlstrand,John Harold Haynes,1993

Toyota Corolla & Geo/Chevrolet Prizm Automotive Repair Manual Jay Storer,John Harold Haynes,2001-06-05 Total Car Care is the most complete step by step automotive repair manual you ll ever use All repair procedures are supported by detailed specifications exploded views and photographs From the simplest repair procedure to the most complex trust Chilton s Total Car Care to give you everything you need to do the job Save time and money by doing it yourself with the confidence only a Chilton Repair Manual can provide **Popular Science** ,1982-02 Popular Science gives our readers the information and tools to improve their technology and their world The core belief that Popular Science and our readers share The future is going to be better and science and technology are the driving forces that will help make it better **Popular Science** ,1977-02 Popular Science gives our readers the information and tools to improve their technology and their world The core belief that Popular Science and our readers share The future is going to be better and science and technology are the driving forces that will help make it better Toyota Corolla Petrol Automotive Repair Manual ,2015-07 Popular Mechanics ,1979-10 Popular Mechanics inspires instructs and influences readers to help them master the modern world Whether it s practical DIY home improvement tips gadgets and digital technology information on the newest cars or the latest breakthroughs in science PM is the ultimate guide to our high tech lifestyle **Popular Science** ,1980-04 Popular Science gives our readers the information and tools to improve their technology and their world The core belief that Popular Science and our readers share The future is going to be better and science and technology are the driving forces that will help make it better **Popular Science** ,1979-06 Popular Science gives our readers the information and tools to improve their technology and their world The core belief that Popular Science and our readers share The future is going to be better and science and technology are the driving forces that will help make it better **Popular Mechanics** ,1979-08 Popular Mechanics inspires instructs and influences readers to help them master the modern world Whether it s practical DIY home improvement tips gadgets and digital technology information on the newest cars or the latest breakthroughs in science PM is the ultimate guide to our high tech lifestyle Popular Science ,1979-03 Popular Science gives our readers the information and tools to improve their technology and their world The core belief that Popular Science and our readers share The future

is going to be better and science and technology are the driving forces that will help make it better *Popular Mechanics* ,1979-12 Popular Mechanics inspires instructs and influences readers to help them master the modern world Whether it s practical DIY home improvement tips gadgets and digital technology information on the newest cars or the latest breakthroughs in science PM is the ultimate guide to our high tech lifestyle *Popular Science* ,1977-06 Popular Science gives our readers the information and tools to improve their technology and their world The core belief that Popular Science and our readers share The future is going to be better and science and technology are the driving forces that will help make it better **Popular Mechanics** ,1977-06 Popular Mechanics inspires instructs and influences readers to help them master the modern world Whether it s practical DIY home improvement tips gadgets and digital technology information on the newest cars or the latest breakthroughs in science PM is the ultimate guide to our high tech lifestyle **Popular Science** ,1982-09 Popular Science gives our readers the information and tools to improve their technology and their world The core belief that Popular Science and our readers share The future is going to be better and science and technology are the driving forces that will help make it better **Popular Science** ,1982-01 Popular Science gives our readers the information and tools to improve their technology and their world The core belief that Popular Science and our readers share The future is going to be better and science and technology are the driving forces that will help make it better *Popular Mechanics* ,1982-04 Popular Mechanics inspires instructs and influences readers to help them master the modern world Whether it s practical DIY home improvement tips gadgets and digital technology information on the newest cars or the latest breakthroughs in science PM is the ultimate guide to our high tech lifestyle **Popular Science** ,1981-10 Popular Science gives our readers the information and tools to improve their technology and their world The core belief that Popular Science and our readers share The future is going to be better and science and technology are the driving forces that will help make it better

When somebody should go to the ebook stores, search establishment by shop, shelf by shelf, it is in point of fact problematic. This is why we give the book compilations in this website. It will enormously ease you to look guide **Toyota Corolla Twincam Repair Manual** as you such as.

By searching the title, publisher, or authors of guide you in point of fact want, you can discover them rapidly. In the house, workplace, or perhaps in your method can be every best area within net connections. If you ambition to download and install the Toyota Corolla Twincam Repair Manual, it is certainly simple then, previously currently we extend the member to buy and create bargains to download and install Toyota Corolla Twincam Repair Manual thus simple!

https://ftp.barnabastoday.com/data/uploaded-files/fetch.php/toyota%20c250%20transmission%20manual.pdf

Table of Contents Toyota Corolla Twincam Repair Manual

1. Understanding the eBook Toyota Corolla Twincam Repair Manual
    - The Rise of Digital Reading Toyota Corolla Twincam Repair Manual
    - Advantages of eBooks Over Traditional Books
2. Identifying Toyota Corolla Twincam Repair Manual
    - Exploring Different Genres
    - Considering Fiction vs. Non-Fiction
    - Determining Your Reading Goals
3. Choosing the Right eBook Platform
    - Popular eBook Platforms
    - Features to Look for in an Toyota Corolla Twincam Repair Manual
    - User-Friendly Interface
4. Exploring eBook Recommendations from Toyota Corolla Twincam Repair Manual
    - Personalized Recommendations
    - Toyota Corolla Twincam Repair Manual User Reviews and Ratings
    - Toyota Corolla Twincam Repair Manual and Bestseller Lists

5. Accessing Toyota Corolla Twincam Repair Manual Free and Paid eBooks
    - Toyota Corolla Twincam Repair Manual Public Domain eBooks
    - Toyota Corolla Twincam Repair Manual eBook Subscription Services
    - Toyota Corolla Twincam Repair Manual Budget-Friendly Options
6. Navigating Toyota Corolla Twincam Repair Manual eBook Formats
    - ePub, PDF, MOBI, and More
    - Toyota Corolla Twincam Repair Manual Compatibility with Devices
    - Toyota Corolla Twincam Repair Manual Enhanced eBook Features
7. Enhancing Your Reading Experience
    - Adjustable Fonts and Text Sizes of Toyota Corolla Twincam Repair Manual
    - Highlighting and Note-Taking Toyota Corolla Twincam Repair Manual
    - Interactive Elements Toyota Corolla Twincam Repair Manual
8. Staying Engaged with Toyota Corolla Twincam Repair Manual
    - Joining Online Reading Communities
    - Participating in Virtual Book Clubs
    - Following Authors and Publishers Toyota Corolla Twincam Repair Manual
9. Balancing eBooks and Physical Books Toyota Corolla Twincam Repair Manual
    - Benefits of a Digital Library
    - Creating a Diverse Reading Collection Toyota Corolla Twincam Repair Manual
10. Overcoming Reading Challenges
    - Dealing with Digital Eye Strain
    - Minimizing Distractions
    - Managing Screen Time
11. Cultivating a Reading Routine Toyota Corolla Twincam Repair Manual
    - Setting Reading Goals Toyota Corolla Twincam Repair Manual
    - Carving Out Dedicated Reading Time
12. Sourcing Reliable Information of Toyota Corolla Twincam Repair Manual
    - Fact-Checking eBook Content of Toyota Corolla Twincam Repair Manual
    - Distinguishing Credible Sources
13. Promoting Lifelong Learning

- Utilizing eBooks for Skill Development
- Exploring Educational eBooks

14. Embracing eBook Trends
    - Integration of Multimedia Elements
    - Interactive and Gamified eBooks

Toyota Corolla Twincam Repair Manual Introduction

Toyota Corolla Twincam Repair Manual Offers over 60,000 free eBooks, including many classics that are in the public domain. Open Library: Provides access to over 1 million free eBooks, including classic literature and contemporary works. Toyota Corolla Twincam Repair Manual Offers a vast collection of books, some of which are available for free as PDF downloads, particularly older books in the public domain. Toyota Corolla Twincam Repair Manual : This website hosts a vast collection of scientific articles, books, and textbooks. While it operates in a legal gray area due to copyright issues, its a popular resource for finding various publications. Internet Archive for Toyota Corolla Twincam Repair Manual : Has an extensive collection of digital content, including books, articles, videos, and more. It has a massive library of free downloadable books. Free-eBooks Toyota Corolla Twincam Repair Manual Offers a diverse range of free eBooks across various genres. Toyota Corolla Twincam Repair Manual Focuses mainly on educational books, textbooks, and business books. It offers free PDF downloads for educational purposes. Toyota Corolla Twincam Repair Manual Provides a large selection of free eBooks in different genres, which are available for download in various formats, including PDF. Finding specific Toyota Corolla Twincam Repair Manual, especially related to Toyota Corolla Twincam Repair Manual, might be challenging as theyre often artistic creations rather than practical blueprints. However, you can explore the following steps to search for or create your own Online Searches: Look for websites, forums, or blogs dedicated to Toyota Corolla Twincam Repair Manual, Sometimes enthusiasts share their designs or concepts in PDF format. Books and Magazines Some Toyota Corolla Twincam Repair Manual books or magazines might include. Look for these in online stores or libraries. Remember that while Toyota Corolla Twincam Repair Manual, sharing copyrighted material without permission is not legal. Always ensure youre either creating your own or obtaining them from legitimate sources that allow sharing and downloading. Library Check if your local library offers eBook lending services. Many libraries have digital catalogs where you can borrow Toyota Corolla Twincam Repair Manual eBooks for free, including popular titles.Online Retailers: Websites like Amazon, Google Books, or Apple Books often sell eBooks. Sometimes, authors or publishers offer promotions or free periods for certain books.Authors Website Occasionally, authors provide excerpts or short stories for free on their websites. While this might not be the Toyota Corolla Twincam Repair Manual full book , it can give you a taste of the authors writing style.Subscription Services Platforms like

Kindle Unlimited or Scribd offer subscription-based access to a wide range of Toyota Corolla Twincam Repair Manual eBooks, including some popular titles.

FAQs About Toyota Corolla Twincam Repair Manual Books

1. Where can I buy Toyota Corolla Twincam Repair Manual books? Bookstores: Physical bookstores like Barnes & Noble, Waterstones, and independent local stores. Online Retailers: Amazon, Book Depository, and various online bookstores offer a wide range of books in physical and digital formats.
2. What are the different book formats available? Hardcover: Sturdy and durable, usually more expensive. Paperback: Cheaper, lighter, and more portable than hardcovers. E-books: Digital books available for e-readers like Kindle or software like Apple Books, Kindle, and Google Play Books.
3. How do I choose a Toyota Corolla Twincam Repair Manual book to read? Genres: Consider the genre you enjoy (fiction, non-fiction, mystery, sci-fi, etc.). Recommendations: Ask friends, join book clubs, or explore online reviews and recommendations. Author: If you like a particular author, you might enjoy more of their work.
4. How do I take care of Toyota Corolla Twincam Repair Manual books? Storage: Keep them away from direct sunlight and in a dry environment. Handling: Avoid folding pages, use bookmarks, and handle them with clean hands. Cleaning: Gently dust the covers and pages occasionally.
5. Can I borrow books without buying them? Public Libraries: Local libraries offer a wide range of books for borrowing. Book Swaps: Community book exchanges or online platforms where people exchange books.
6. How can I track my reading progress or manage my book collection? Book Tracking Apps: Goodreads, LibraryThing, and Book Catalogue are popular apps for tracking your reading progress and managing book collections. Spreadsheets: You can create your own spreadsheet to track books read, ratings, and other details.
7. What are Toyota Corolla Twincam Repair Manual audiobooks, and where can I find them? Audiobooks: Audio recordings of books, perfect for listening while commuting or multitasking. Platforms: Audible, LibriVox, and Google Play Books offer a wide selection of audiobooks.
8. How do I support authors or the book industry? Buy Books: Purchase books from authors or independent bookstores. Reviews: Leave reviews on platforms like Goodreads or Amazon. Promotion: Share your favorite books on social media or recommend them to friends.
9. Are there book clubs or reading communities I can join? Local Clubs: Check for local book clubs in libraries or

community centers. Online Communities: Platforms like Goodreads have virtual book clubs and discussion groups.

10. Can I read Toyota Corolla Twincam Repair Manual books for free? Public Domain Books: Many classic books are available for free as theyre in the public domain. Free E-books: Some websites offer free e-books legally, like Project Gutenberg or Open Library.

Find Toyota Corolla Twincam Repair Manual :

toyota c250 transmission manual
~~toshiba wt200 manual~~
toyota caldina car manual
towmotor repair manual
~~toyota 2k engine manual~~
toyota 7fbcu15 55 7fbchu25 electric powered forklift service repair manual
toshiba satellite c655 user manual
tourism exam papers grade 12
touchpoints creating powerful leadership connections in the smallest of moments
tourism development handbook a practical approach to planning and marketing
toyota 2e engine manual
towards a contextual psychology of disablism towards a contextual psychology of disablism
total immersion the comprehensive unauthorized red dwarf encyclopedia a k volume 1
toshiba sd 4900 manual
total gym 3000 owners manual

Toyota Corolla Twincam Repair Manual :

ebook introduction to electronic circuit design ghausi solution - Apr 01 2022
web introduction to electronic circuit design jul 29 2023 a basic understanding of circuit design is useful for many engineerseven those who may never actually design a circuitbecause it is likely that they will fabricate test or
introduction to electronic circuit design by spencer ghausi - Jun 03 2022
web read pdf introduction to electronic circuit design by spencer ghausi solutions this comprehensive source book of circuit design solutions will aid systems designers with elegant and practical design techniques that focus on common circuit design

challenges the book s in depth application examples

introduction to electronic circuit design part 1 google books - Sep 18 2023

web introduction to electronic circuit design part 1 richard r spencer mohammed shuaib ghausi prentice hall 2003 electronic circuit design 1132 pages

introduction to electronic circuit design ghausi solution 2022 - Nov 08 2022

web 2 introduction to electronic circuit design ghausi solution 2023 05 14 author marc thompson s 30 years of experience designing analog and power electronics circuits and teaching graduate level analog circuit design and is

introduction to electronic circuit design ghausi solution pdf - Mar 12 2023

web introduction to electronic circuit design ghausi solution electronic circuits introduction online tutorials library dec 28 2021 web a circuit is a network of different components there are different types of circuits the following image shows different types of electronic circuits it shows printed circuit boards which are a group of

introduction to electronic circuit design ghausi solution book - Aug 17 2023

web introduction to electronic circuit design ghausi solution electronic circuit design and application may 07 2023 this textbook for core courses in electronic circuit design teaches students the design and application of a broad range of analog electronic circuits in a comprehensive and clear manner readers will be enabled to design complete

introduction to electronic circuit design ghausi solution pdf - Aug 05 2022

web jul 20 2023 introduction to electronic circuit design ghausi solution 3 6 downloaded from uniport edu ng on july 20 2023 by guest electronics and circuit analysis using matlab second edition helps build that proficiency it provides an easy practical introduction to matlab and clearly demonstrates its use in

introduction to electronic circuit design ghausi solution copy - May 14 2023

web introduction to electronic circuit design ghausi solution cmos analog design using all region mosfet modeling may 27 2020 covering the essentials of analog circuit design this book takes a unique design approach based on a mosfet model valid for all operating regions rather than the standard square law model

introduction to electronic circuit design ghausi solution - May 02 2022

web feb 28 2023 to the statement as skillfully as sharpness of this introduction to electronic circuit design ghausi solution can be taken as without difficulty as picked to act the british national bibliography cumulated subject catalogue 1970 books in print supplement 1985 analogue ic design chris toumazou 1993 analogue ic design

introduction to electronic circuit design ghausi solution copy - Apr 13 2023

web electronic circuit design ideas covers a wide variety of electronic circuit design which consists of a circuit diagram waveforms and an explanation of how the circuit works this text contains 14 chapters

introduction to electronic circuit design ghausi solution pdf - Oct 07 2022
web introduction to electronic circuit design ghausi solution 2012 12 03 3 21 introduction to electronic circuit design ghausi solution grips with the fundamentals of electronics detailing the underpinning knowledge necessary to appreciate the operation of a wide range of electronic circuits including
introduction to electronic circuit design ghausi solution - Sep 06 2022
web introduction to electronic circuit design united states introduction to basic electronics electronic components introduction to electronic circuit design 2 volume set
introduction to electronic circuit design 2 volume set - Jun 15 2023
web aug 19 2002 introduction to electronic circuit design 2 volume set spencer richard ghausi mohammed 9780201361834 amazon com books books
introduction to electronic circuit design ghausi solution - Jul 04 2022
web sep 18 2023 introduction to electronic circuit design ghausi solution fittingly simple analogue ic design chris toumazou 1993 analogue ic design has become the essential title covering the current mode approach to integrated circuit design
introduction to electronic circuit design ghausi solution pdf - Feb 28 2022
web r spencer mohammed introduction to electronic circuit design book 2003 fundamentals of electronic circuit design outline part i fundamental principles 1 the basics 1 1 voltage and current 1 2 resistance and power 1 3 sources of electrical energy 1 4 ground 1 5 electrical
introduction to electronic circuit design ghausi solution - Jan 10 2023
web to get those all we allow introduction to electronic circuit design ghausi solution and numerous ebook collections from fictions to scientific research in any way along with them is this introduction to electronic circuit design ghausi solution that can be your partner introduction to circuit synthesis and design gabor c temes 2023 04 06
introduction to electronic circuit design semantic scholar - Jul 16 2023
web aug 19 2002 i the foundations of electronic circuit design 1 electronic circuit design the process of design analysis for design electronic systems notation 2 semiconductor physics and electronic devices material properties conduction mechanisms conductor to semiconductor contacts pn junction diodes
introduction to electronic circuit design ghausi solution - Feb 11 2023
web apr 8 2023 enjoy now is introduction to electronic circuit design ghausi solution below analog circuit design may 29 2022 analog circuit and system design today is more essential than ever before with the growth of digital systems wireless communications complex industrial and automotive systems designers are challenged
introduction to electronic circuit design united states edition - Dec 09 2022

web introduction to electronic circuit design united states edition paperback 9 august 2002 by richard spencer author mohammed ghausi author 3 8 3 8 out of 5 stars 9 ratings as well as methods to check the validity of solutions computed from the more advanced techniques

introduction to electronic circuit design ghausi solution pdf - Oct 19 2023

web introduction introduction to electronic circuit design ghausi solution pdf pdf circuits devices and systems ralph j smith 1992 04 16 this book is also available through the introductory engineering custom publishing system

elric le nécromancien by michaël moorcock - May 17 2023

web elric le nécromancien by michaël moorcock blog signal brain network fr le cycle d elric 4 elric le necromancier kylie jenner gocnhinadam bnf chroniques pocket science fiction fantasy n 5170 1987 michael moorcock elric 4 elric le nécromancien blog signal brain network

elric le nécromancien by michaël moorcock secure4 khronos - May 05 2022

web jun 17 2023 elric le nécromancien by michaël moorcock elric le nécromancien by michaël moorcock kylie jenner gocnhinadam bnf chroniques fr le cycle d elric 4 elric le necromancier blog signal brain network when individuals should go to the online bookstores look up beginning by boutique shelf by shelf it is in point of actually

elric le na c cromancien pdf uniport edu - Jan 13 2023

web jun 27 2023 elric le na c cromancien 1 2 downloaded from uniport edu ng on june 27 2023 by guest elric le na c cromancien if you ally need such a referred elric le na c cromancien book that will meet the expense of you worth acquire the certainly best seller from us currently from several preferred authors if you desire to funny

elric le na c cromancien tome 4 le cycle d elric book - Jun 06 2022

web elric le na c cromancien tome 4 le cycle d elric the guide for the instruction in german without grammar and dictionary with an english introduction describing the method used at the school of modern languages in boston aug 24 2021 isabellae tome 4 4 under the tomb of 500 kings aug 04 2022

elric le nécromancien by michaël moorcock secure4 khronos - Jun 18 2023

web jun 27 2023 fr le cycle d elric 4 elric le necromancier bnf chroniques kylie jenner gocnhinadam blog signal brain network pocket science fiction fantasy n 5170 1987 michael moorcock elric 4 elric le nécromancien le jeu des sabliers de jean claude dunyach 1987 1988 est l un des rares exemples

el roman müzik youtube - Jan 01 2022

web el roman müzik youtube resmi kanalıdır

read free elric le na c cromancien pdf for free kingdomstv - Dec 12 2022

web notice elric le na c cromancien can be one of the options to accompany you later having new time it will not waste your

time say yes me the e book will totally song you additional issue to read just invest tiny mature to admission this on line proclamation elric le na c cromancien as

elric le nécromancien by michaël moorcock secure4 khronos - Apr 16 2023

web elric le nécromancien by michaël moorcock secure4 khronos org author benno kesselman secure4 khronos org subject elric le nécromancien by michaël moorcock secure4 khronos org keywords kylie jenner gocnhinadam blog signal brain network bnf chroniques fr le cycle d elric 4 elric le necromancier created date 5 27 2023

the revised elric of r lyeh transient beings hq - Apr 04 2022

web ebook elric le na c cromancien pdf books this is the book you are looking for from the many other titlesof elric le na c cromancien pdf books here is alsoavailable other sources elric of melnibone by michael moorcock book one of the it is the colour of a bleached skull his flesh and the long hair which flows below his shoulders

elric le na c cromancien tome 4 le cycle d elric pdf full pdf - Mar 15 2023

web jul 10 2023 right here we have countless book elric le na c cromancien tome 4 le cycle d elric pdf and collections to check out we additionally come up with the money for variant types and afterward type of the books to browse

elric le nécromancien by michaël moorcock - Nov 11 2022

web ce panorama signalons enfin que l écrivain anglais michael moorcock a donné une nouvelle du cycle de fantasy mondialement connu elric le nécromancien posée en août 2006 et intitulée a portrait in ivory

biblioprofil elric le nÃ cromancien - Jul 19 2023

web aprÃ s deux tomes en demi teinte voici un livre majeur du cycle dâ elric elric le nÃ cromancien est un grand roman de ceux dont on perÃ oit encore lâ influence 30 ans plus tard moorcock est dÃ finitivement un des plus grands auteurs et cet Ã pisode des aventures dâ elric devrait suffire Ã vous convaincre

elric le na c cromancien pqr uiaf gov co - Feb 14 2023

web said the elric le na c cromancien is universally compatible in imitation of any devices to read measurement of residual and applied stress using neutron diffraction m t hutchings 2012 12 06 the accurate absolute and non destructive measurement of residual stress fields within metallic ceramic and

elric le nécromancien tome 4 le cycle d elric by michael - Jul 07 2022

web elric le nécromancien tome 4 le cycle d elric by michael moorcock author rainer sauerland from crm worldmerit org subject elric le nécromancien tome 4 le cycle d elric by michael moorcock keywords le elric by 4 tome d michael elric moorcock cycle nécromancien le created date

elric le nécromancien wikipédia - Aug 20 2023

web elric le nécromancien titre original the weird of the white wolf est un recueil de nouvelles d heroic fantasy écrites par

michael moorcock et publié en france en 1977 il met en scène les aventures d elric de melniboné une incarnation du champion éternel il fait partie du cycle d elric

elric le nécromancien by michaël moorcock secure4 khronos - Sep 09 2022

web jun 7 2023 potentially you have insight that people have look numerous times for their beloved books later this elric le nécromancien by michaël moorcock but end up in detrimental downloads plainly put the elric le nécromancien by michaël moorcock is widely compatible with any devices to download understanding the overstatement ways

prénom elric etymologie origine popularité et signification du - Feb 02 2022

web elric est un garçon réservé et secret ayant une tendance à intérioriser ses sentiments il est considéré comme une personne mystérieuse en réalité c est quelqu un qui ne s engage pas facilement il fait preuve de timidité de

elric le nécromancien by michaël moorcock droplet1 ardupilot - Oct 10 2022

web jun 10 2023 actually tricky elric le nécromancien by michaël moorcock is available in our literature accumulation an online access to it is set as public so you can get it instantaneously kylie jenner gocnhinadam fr le cycle d elric 4 elric le necromancier blog signal brain network bnf chroniques pocket science fiction fantasy n

prénom elric origine signification et étymologie - Mar 03 2022

web Étymologie et signification du prénom elric ce prénom apparenté aux elrick est d origine anglaise vient de el et rik en anglais et signifie noble et puissant

elric le na c cromancien beatriz rodríguez - Aug 08 2022

web elric le na c cromancien 2 10 downloaded from secure docs lenderhomepage com on by guest the fascinating story of a genius greed exquisite beauty revealed by the obsessive pursuit of the secret formula for one of the most precious commodities of eighteenth century european royalty fine porcelain principles and techniques of

eric ed070580 principles of naval engineering 1970 - Aug 07 2023

web fundamentals of shipboard machinery equipment and engineering plants are presented in this text prepared for engineering officers a general description is included of the development of naval ships ship design and construction stability and buoyancy and damage and casualty control

principles of naval engineering by matthew a carr open library - Mar 02 2023

web oct 31 2022 principles of naval engineering by matthew a carr 2012 naval institute press edition in english

principles of naval engineering amazon com - Jul 26 2022

web dec 26 2009 principles of naval engineering first edition by bureau of naval personnel author 4 2 10 ratings see all formats and editions hardcover 111 50 1 used from 111 66 4 new from 111 50 paperback 74 78 2 used from 75 83 4 new from 74 78

applied engineering principles manual naval sea systems command - Aug 27 2022
web applied engineering principles manual naval sea systems command navy department washington d c navsea training manual applied engineering principles manual naval sea systems command navy department rev 1 acn 1 may 2003 record of revisions record of revisions

principles of naval engineering pages 1 50 fliphtml5 - May 24 2022
web oct 19 2017 check pages 1 50 of principles of naval engineering in the flip pdf version principles of naval engineering was published by mydocshelves digital document system on 2017 10 19 find more similar flip pdfs like principles of naval engineering download principles of naval

principles of naval engineering propulsion and auxiliary systems - Apr 22 2022
web aug 15 2012 principles of naval engineering propulsion and auxiliary systems blue gold professional library hardcover illustrated august 15 2012 this textbook covers the basic design and operating principles of the propulsion and auxiliary systems of today s naval forces the topics include the main components in the propulsion and

principles of naval engineering google play - Feb 01 2023
web principles of naval engineering ebook written by united states bureau of naval personnel read this book using google play books app on your pc android ios devices download for offline

principles of naval engineering google books - Jul 06 2023
web bibtex endnote refman intended to provide new naval officers with the essential foundation for understanding the specific mechanical systems they encounter in ships submarines aircraft and

principles of naval engineering united states bureau of naval - Oct 09 2023
web dec 31 2014 basic principles of ship construction and stability are addressed as well finally there is a brief overview of other power sources including diesel gas turbines and nuclear highly recommended for those with an interest in naval history especially during the years between world war ii and the post vietnam era

principles of naval engineering open library - Oct 29 2022
web jun 26 2012 principles of naval engineering by united states bureau of naval personnel 0 ratings 1 want to read 0 currently reading 0 have read this edition doesn t have a description yet can you add one publish date 1992 publisher naval education and training program management support activity language english previews

chapter 1 engineering fundamentals united states naval academy - May 04 2023
web engineering fundamentals be familiar with engineering graphing drawing and sketching techniques explain what dependent and independent variables are notation used and how relationships are developed between them be familiar with the unit systems used in engineering specifically for this course

principles of naval engineering u s naval institute - Sep 08 2023
web aug 15 2012 this textbook covers the basic design and operating principles of the propulsion and auxiliary systems of today s naval forces the topics include the main components in the propulsion and auxiliary systems for both conventional and nuclear steam propulsion gas turbine power plants for both ship and aircraft applications and internal
en400 united states naval academy - Nov 29 2022
web engineering to complete certain engineering courses principles of ship performance en400 is just such a course affectionately known as boats the course is relevant to all future naval and marine corp offi cers regardless of designator even if your future career path takes you into the
principles of naval engineering i naval education and training - Jun 05 2023
web principles of naval engineering i by naval education and training program development center
archive org - Apr 03 2023
web learn the fundamentals of naval engineering from this classic textbook published by the u s bureau of naval personnel this pdf contains chapters on thermodynamics fluid mechanics propulsion electrical systems and more download it
access principles of naval engineering u s naval institute - Dec 31 2022
web access principles of naval engineering please provide the access code you were given to view this book your access code if you are a student and have registered for access to the u s naval institute digital library please login here to view your online collection
principles of naval architecture mechanical engineering mit - Jun 24 2022
web course description this course presents principles of naval architecture ship geometry hydrostatics calculation and drawing of curves of form intact and damage stability hull structure strength calculations and ship resistance it introduces computer aided naval ship design and analysis tools projects include analysis of ship lines
syllabus principles of naval architecture mechanical engineering - Mar 22 2022
web this course presents principles of naval architecture ship geometry hydrostatics calculation and drawing of curves of form intact and damage stability hull structure strength calculations and ship resistance it introduces computer aided naval ship design and analysis tools projects include analysis of ship lines drawings calculation of
pdf lecture notes on basic naval architecture researchgate - Sep 27 2022
web sep 1 2021 with the above in mind this set of lecture notes outlines some of the principles of naval architecture and marine engineering for use in concept ship design
readings principles of naval architecture mechanical engineering - Feb 18 2022
web principles of naval architecture series the geometry of ships the society of naval architects and marine engineers 2010

isbn 9780939773671 books in this series are available for purchase at the society of naval architects and marine engineers website