TOPCON

INSTRUCTION MANUAL

ELECTRONIC TOTAL STATION

GTS-300 SERIES

GTS-301D
GTS-302D
GTS-303D
GTS-303

Specializing in quality
used surveying and
optical equipment

Hodgens Equipment Sales

www.hodgens.net equip@hodgens.net
800-463-4367

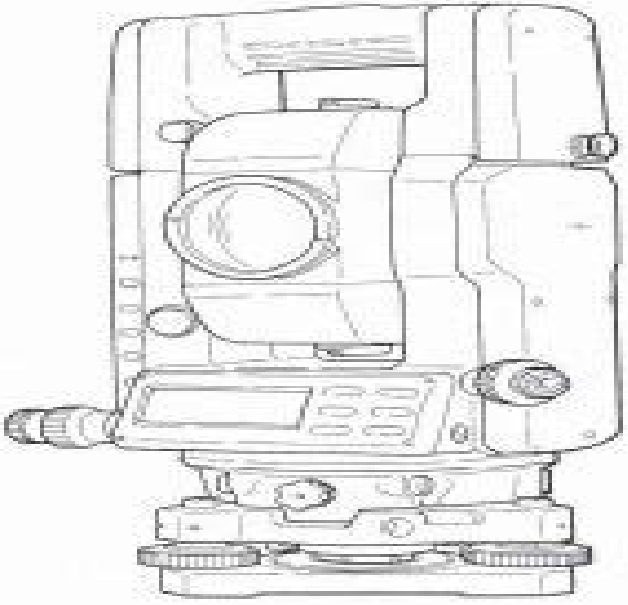

Topcon Gts 300 Manual

Clifford Lane

Topcon Gts 300 Manual:

Public Works Manual ,1993 **Improving Your Field Procedures** James P. Reilly,1990 Successful Field-to-office Automation Alan W. Roth,1990 *Modern Photography* ,1974 *Serie Anales de la Reunión Anual de Etnología* ,2012 **Popular Photography** ,1975 *Fiesta y religiosidad* ,2013 **PS 300 reference manual** Evans and Sutherland Computer Corp,1981 **Professional 300 Series** Digital Equipment Corporation,1982 *Honda 250, 300 Shop Manual* Honda Giken Kōgyō Kabushiki Kaisha. Technical Section. Export Department,1960

Discover tales of courage and bravery in Explore Bravery with is empowering ebook, Stories of Fearlessness: **Topcon Gts 300 Manual** . In a downloadable PDF format (Download in PDF: *), this collection inspires and motivates. Download now to witness the indomitable spirit of those who dared to be brave.

https://ftp.barnabastoday.com/book/detail/default.aspx/Vivir%20Con%20Plenitud%20La%20Crisis%20Ensayo.pdf

Table of Contents Topcon Gts 300 Manual

1. Understanding the eBook Topcon Gts 300 Manual
    - The Rise of Digital Reading Topcon Gts 300 Manual
    - Advantages of eBooks Over Traditional Books
2. Identifying Topcon Gts 300 Manual
    - Exploring Different Genres
    - Considering Fiction vs. Non-Fiction
    - Determining Your Reading Goals
3. Choosing the Right eBook Platform
    - Popular eBook Platforms
    - Features to Look for in an Topcon Gts 300 Manual
    - User-Friendly Interface
4. Exploring eBook Recommendations from Topcon Gts 300 Manual
    - Personalized Recommendations
    - Topcon Gts 300 Manual User Reviews and Ratings
    - Topcon Gts 300 Manual and Bestseller Lists
5. Accessing Topcon Gts 300 Manual Free and Paid eBooks
    - Topcon Gts 300 Manual Public Domain eBooks
    - Topcon Gts 300 Manual eBook Subscription Services
    - Topcon Gts 300 Manual Budget-Friendly Options
6. Navigating Topcon Gts 300 Manual eBook Formats

- ePub, PDF, MOBI, and More
- Topcon Gts 300 Manual Compatibility with Devices
- Topcon Gts 300 Manual Enhanced eBook Features

7. Enhancing Your Reading Experience
    - Adjustable Fonts and Text Sizes of Topcon Gts 300 Manual
    - Highlighting and Note-Taking Topcon Gts 300 Manual
    - Interactive Elements Topcon Gts 300 Manual
8. Staying Engaged with Topcon Gts 300 Manual
    - Joining Online Reading Communities
    - Participating in Virtual Book Clubs
    - Following Authors and Publishers Topcon Gts 300 Manual
9. Balancing eBooks and Physical Books Topcon Gts 300 Manual
    - Benefits of a Digital Library
    - Creating a Diverse Reading Collection Topcon Gts 300 Manual
10. Overcoming Reading Challenges
    - Dealing with Digital Eye Strain
    - Minimizing Distractions
    - Managing Screen Time
11. Cultivating a Reading Routine Topcon Gts 300 Manual
    - Setting Reading Goals Topcon Gts 300 Manual
    - Carving Out Dedicated Reading Time
12. Sourcing Reliable Information of Topcon Gts 300 Manual
    - Fact-Checking eBook Content of Topcon Gts 300 Manual
    - Distinguishing Credible Sources
13. Promoting Lifelong Learning
    - Utilizing eBooks for Skill Development
    - Exploring Educational eBooks
14. Embracing eBook Trends
    - Integration of Multimedia Elements
    - Interactive and Gamified eBooks

Topcon Gts 300 Manual Introduction

Topcon Gts 300 Manual Offers over 60,000 free eBooks, including many classics that are in the public domain. Open Library: Provides access to over 1 million free eBooks, including classic literature and contemporary works. Topcon Gts 300 Manual Offers a vast collection of books, some of which are available for free as PDF downloads, particularly older books in the public domain. Topcon Gts 300 Manual : This website hosts a vast collection of scientific articles, books, and textbooks. While it operates in a legal gray area due to copyright issues, its a popular resource for finding various publications. Internet Archive for Topcon Gts 300 Manual : Has an extensive collection of digital content, including books, articles, videos, and more. It has a massive library of free downloadable books. Free-eBooks Topcon Gts 300 Manual Offers a diverse range of free eBooks across various genres. Topcon Gts 300 Manual Focuses mainly on educational books, textbooks, and business books. It offers free PDF downloads for educational purposes. Topcon Gts 300 Manual Provides a large selection of free eBooks in different genres, which are available for download in various formats, including PDF. Finding specific Topcon Gts 300 Manual, especially related to Topcon Gts 300 Manual, might be challenging as theyre often artistic creations rather than practical blueprints. However, you can explore the following steps to search for or create your own Online Searches: Look for websites, forums, or blogs dedicated to Topcon Gts 300 Manual, Sometimes enthusiasts share their designs or concepts in PDF format. Books and Magazines Some Topcon Gts 300 Manual books or magazines might include. Look for these in online stores or libraries. Remember that while Topcon Gts 300 Manual, sharing copyrighted material without permission is not legal. Always ensure youre either creating your own or obtaining them from legitimate sources that allow sharing and downloading. Library Check if your local library offers eBook lending services. Many libraries have digital catalogs where you can borrow Topcon Gts 300 Manual eBooks for free, including popular titles.Online Retailers: Websites like Amazon, Google Books, or Apple Books often sell eBooks. Sometimes, authors or publishers offer promotions or free periods for certain books.Authors Website Occasionally, authors provide excerpts or short stories for free on their websites. While this might not be the Topcon Gts 300 Manual full book , it can give you a taste of the authors writing style.Subscription Services Platforms like Kindle Unlimited or Scribd offer subscription-based access to a wide range of Topcon Gts 300 Manual eBooks, including some popular titles.

FAQs About Topcon Gts 300 Manual Books

1. Where can I buy Topcon Gts 300 Manual books? Bookstores: Physical bookstores like Barnes & Noble, Waterstones, and independent local stores. Online Retailers: Amazon, Book Depository, and various online bookstores offer a wide

range of books in physical and digital formats.

2. What are the different book formats available? Hardcover: Sturdy and durable, usually more expensive. Paperback: Cheaper, lighter, and more portable than hardcovers. E-books: Digital books available for e-readers like Kindle or software like Apple Books, Kindle, and Google Play Books.
3. How do I choose a Topcon Gts 300 Manual book to read? Genres: Consider the genre you enjoy (fiction, non-fiction, mystery, sci-fi, etc.). Recommendations: Ask friends, join book clubs, or explore online reviews and recommendations. Author: If you like a particular author, you might enjoy more of their work.
4. How do I take care of Topcon Gts 300 Manual books? Storage: Keep them away from direct sunlight and in a dry environment. Handling: Avoid folding pages, use bookmarks, and handle them with clean hands. Cleaning: Gently dust the covers and pages occasionally.
5. Can I borrow books without buying them? Public Libraries: Local libraries offer a wide range of books for borrowing. Book Swaps: Community book exchanges or online platforms where people exchange books.
6. How can I track my reading progress or manage my book collection? Book Tracking Apps: Goodreads, LibraryThing, and Book Catalogue are popular apps for tracking your reading progress and managing book collections. Spreadsheets: You can create your own spreadsheet to track books read, ratings, and other details.
7. What are Topcon Gts 300 Manual audiobooks, and where can I find them? Audiobooks: Audio recordings of books, perfect for listening while commuting or multitasking. Platforms: Audible, LibriVox, and Google Play Books offer a wide selection of audiobooks.
8. How do I support authors or the book industry? Buy Books: Purchase books from authors or independent bookstores. Reviews: Leave reviews on platforms like Goodreads or Amazon. Promotion: Share your favorite books on social media or recommend them to friends.
9. Are there book clubs or reading communities I can join? Local Clubs: Check for local book clubs in libraries or community centers. Online Communities: Platforms like Goodreads have virtual book clubs and discussion groups.
10. Can I read Topcon Gts 300 Manual books for free? Public Domain Books: Many classic books are available for free as theyre in the public domain. Free E-books: Some websites offer free e-books legally, like Project Gutenberg or Open Library.

Find Topcon Gts 300 Manual :

vivir con plenitud la crisis ensayo

vivitar vivicam f529 manual
~~vincent van gogh der roman eines gottsuchers~~
viking husqvarna opal 650 manual
vintage jewelry 1920 1940s an identification and price guide leigh leshner
~~vinyl the analogue record in the digital age~~
~~virtual business turnaround guide~~
~~visual c 6 unleashed adobe reader d bennett~~
vino mortale apulien krimi kirsten wulf
vitus bering de zeevaarder
visual anatomy and physiology 2e martini stormrg
visualizing human biology lab manual binder ready version
~~viking husqvarna 215 sewing machine instruction manual~~
vital witnesses using primary sources in history and social studies
vintage snowmobiles the golden years 1968 1982 photo gallery

Topcon Gts 300 Manual :

what s an in tray exercise with advice and what to expect - Jun 04 2023
web sep 5 2022 what is an in tray exercise in tray exercises or the digital version e tray exercises are a test of your capacity to deal with a real world work environment such as a high volume of information and a variety of competing demands on your time
in tray exercise 2023 practice guide 2023 - Sep 07 2023
web an in tray exercise is a simulation of a real work scenario used in the selection process for certain job roles it s usually conducted during an assessment centre day and aims to evaluate a candidate s work behaviour and attitudes such as time management and communication skills
how to do well at in tray and e tray exercises - Aug 26 2022
web apr 4 2019 practice in tray e tray exercises before the real one practice makes perfect so make sure to use all resources available to you before the real exercise takes place you can access graduates first through our subscription if you are a current king s student what can i do to perform well
in tray exercise free practice test tips 2023 update wikijob - Sep 26 2022
web sep 25 2023 this is a practice in tray exercise that simulates a real in tray aptitude test the test has 37 questions and

you should aim to complete the test within 40 minutes make sure you read a question in full before answering answers and explanations to the questions are provided at the end of the test

in tray exercise oxford reference - Jul 25 2022

web nov 20 2021 if designed carefully the in tray exercise can be an effective simulation to test how candidates might organize and prioritize work and how they might cope with pressure in tray exercises are also used in management development programmes although their effectiveness as a learning tool is dependent on having good quality

in tray exercise 3 expert tips for success youtube - Oct 28 2022

web jun 10 2013 in tray exercise 3 expert tips for success you can find my full in tray exercise guide at assessmentcentrehq com ite in this video i explain what an in tray exercise is before sharing 3

in tray exercise preparation guide examples and tips for success - Jan 31 2023

web the in tray exercise is a business simulation assessment that employers use to evaluate your professional skills in an actual work scenario you will take on the role of a company employee and deal with the workload of a typical day in the form of emails reports meeting requests and so on

in tray e tray exercises fact sheet university of exeter - Mar 01 2023

web how do in tray exercises work the basic idea of in tray exercises is to place you in a realistic although simulated work situation and to assess your workplace behaviour and attitudes in that context so when you re given an in tray exercise it s usual to be asked to treat it as a role play

in tray exercise free in tray exercise with solutions - Aug 06 2023

web aug 25 2022 an in tray exercise is a type of assessment tool used by employers to evaluate a candidate s suitability for a particular job role the exercise is typically designed to simulate a work scenario in which you are given a set of documents emails memos and other types of correspondence that you would likely encounter in the job

in tray tips how to pass in tray exercises youtube - Apr 21 2022

web oct 12 2018 in tray tips how to pass in tray exercises careervidz 3 6m subscribers join subscribed 565 share save 82k views 5 years ago in this video jacob from how2become takes a look at some

in tray and e tray exercises how 2 become - May 23 2022

web in tray is a paper based exercise which simulates an office environment the goal of the exercise is to be similar to a normal working day for the job which you are applying for therefore in tray is an excellent way to measure a candidate s ability and see whether they work in a way which is conducive to the job and business as a whole

in tray exercise for ict 2022 protese odontocompany - Mar 21 2022

web 4 in tray exercise for ict 2023 06 03 teachers to integrate the teaching of ict with other subject areas this handbook

contains a range of practical teaching activities which allow pupils to apply and develop their ict capability in meaningful curriculum contexts this book includes activities for all primary years and covers all uk curricula

a guide to in tray exercises overview tips to pass 2023 - May 03 2023

web in tray exercise is a work simulation assessment test these exercises ask the candidate to go through several workplace scenarios with a pre assigned employee role at an imaginative organization

free in tray exercise example jobtestprep - Dec 30 2022

web in tray exercise example 1 for the purpose of this exercise you are jeremy ingles human resource manager in beta computers ltd it is 7 30 am tuesday morning the 24th of february you have just returned to the office after a two week absence business trip and you are leaving on the 26th of february for a two week holiday

in tray exercises tasks complete practice guide tips 2023 - Jul 05 2023

web nov 4 2023 the in tray exercise also called an e tray exercise is a popular assessment activity which employers use to evaluate the skills of applicants in a workplace situation if you have an in tray exercise coming up as part of your interview process this article will help you prepare

in tray exercise free example top tips 2023 assessment - Oct 08 2023

web the purpose of the in tray exercise is to evaluate and test how well you efficiently use your time resources prioritize your workload identify investigate and address key issues anticipate and resolve problems delegate and liaise with others

e tray and in tray exercises london school of economics and - Apr 02 2023

web e tray in tray exercises are essentially the same thing the only difference being that one is computer based while the other is paper based simulating a real work situation you will be given background information on the company your role within it and a scenario where you are faced with an e tray in tray full of memos emails telephone

in tray exercise for ict help environment harvard edu - Feb 17 2022

web in tray exercise for ict if you ally obsession such a referred in tray exercise for ict book that will present you worth get the utterly best seller from us currently from several preferred authors if you want to funny books lots of novels tale jokes and more fictions collections are then launched from best seller to one

in tray exercises examples tips more youtube - Jun 23 2022

web jul 18 2014 names such as in tray exercises work simulation assessment centres job assessments job simulation and role plays have been used to describe the basic exercise of having candidates engaging in

what are in tray exercises targetjobs - Nov 28 2022

web jun 21 2023 in tray or e tray exercises can be used to assess a range of workplace skills and competencies listed below click on the links to discover how to develop them prioritisation and time management

□□ □ □□ □□ □□ facebook - Sep 04 2022
web □□ □ □□ □□ □□ 20 539 likes 280 talking about this □□ □□ □ □ □ □ □□ □ □ □□ □□
□ □□ □□ □ □ □ □ □ □ □ □ kannada kama stories - Feb 09 2023
web □ □□ □□ □ □ □ □ □ □ □ □ by rasika raaja on 9 13 pm in atte aliya □□ □ □□ □ □ □ □□ □□ □ □□ □ □□ □ □ □ □ □ □□ □□ □ □□ □□□ □
□□ □ □ □ □ □
□ □□ □□ □ □□ □□ □ □ □ □ □ □□ □ □ - Mar 30 2022
web sep 9 2022 □ □□ □□ □ □□ □□ □ □ □ □ □□ □ □ □□ □□ □□□ □□ □ □ □ □
kannada kama purana com ministry of education youth and - Feb 26 2022
web kannada kama purana com 1 3 map index pdf kannada kama purana com this is likewise one of the factors by obtaining the soft documents of this kannada kama purana com by online you might not require more times to spend to go to the ebook opening as without difficulty as search for them in some cases you likewise do not discover the
□□ □ □ □ □ □ □□ □ □ □□ □ *6 new sex story* - May 12 2023
web jun 4 2020 more from kannada sex stories □ □ □ □ □ □ □□ □ □ □ □ □ □□ □□ □□ □ □ □ □□ 3 yashodeya agamana bhaga 2 □ □ □
□□ □ □□ □ □□ □ □ □ □ □ □ □ 11
□□ □□ □ □ □□ □□ □□ □ □□ □□ □□ □ □ □ □ *kannada kama* - Aug 03 2022
web mar 1 2022 7 1k views 1 year ago karnataka □□ □□ □ □ □□ □□ □□ □ □□ □□ □□ □ □ □ □ kannada kama kathegalu kannada kamakathegalu hotgkkannada blogspot com more more
kutumba kama puraana bangalore facebook - Jan 28 2022
web kutumba kama puraana bangalore india 9 691 likes 34 talking about this 1 was here its a family entertainer which includes dad mom son daughter its just an entertainer to read
□ □ □□ □ □□ □ □□ □□ □□ □ □ **kannada kama** - Aug 15 2023
web □ □ □□ □ □□ □ □□ □□ □□ □ □ kannada kama kathegalu □ □ □□ □□ □ □ □□ □□ □ □□ □□ □ □ □□ □□□ □□ □ □ □□ □ □ □□ □□ □ □□□ □□ 21
□□ □ □□ □
□ □ □ □ □ □ □ □ □ □ □ □ □ □ □ □ **kannada call** - Jun 01 2022
web mar 20 2022 kannada call record kannada call record romantic kannada sex audio sex audio call recording kannada kannada kama kathegalu kuku stoeies kannada moral st
□□ □□ □ □ □ □ □□□ □□ □ □□ *kannada kama stories* - Dec 07 2022
web kannada kama kathegalu rasikathegalu shrungara kathegalu □□ □□ □ □□ □ □□□ □ □□ □ □ □□ □ □ □ □ □ □□ □ □□□ □ □ □□
□□ □□ □ □ □ □ □ □ □ □ □□ □ kannada kama - Jan 08 2023
web □□ □□ □ □ □ □ □ □ □ □ □□ □ by rasika raaja on 10 23 pm in akka tamma □□ □ □□ □ □ □ □ □ □□ □□ □□ □□ □ □□□ □□ □ □ □□ □□ □ □□

□ □ □□ □ □□ □□ □□

□ □ □ □□□ □□□ □□ □ **rasikathegalu kannada sex** - Apr 11 2023

web jan 12 2019 kannada kama kama kathegalu shrungaara kathegalu □ □ □ □ □□ □ □ □ □□ □ □ □□□ □ □□ □ □ □ □

rekabet içine girmeyi ve zor işlerde başarılı olmayı denemeyi seviyor genellikle gözünde büyüttüğü şeyleri yapmaya çalışırken başarısız olmasına rağmen

watch full length yu gi oh episodes online - Mar 01 2022

zexal yu gi oh s 4 ep 1 duration 21 18 a new evil part 1 yu gi oh s 4 ep 2 duration 21 35 a new evil part 2 yu gi oh s 4 ep 3 duration 21 21 legend of the dragons yu gi oh s 4 ep 4 duration 21 21 the creator returns yu gi oh s 4 ep 5 duration 20 32 deja duel part 1 yu gi oh s 4 ep 6 duration 20 51 deja duel part 2 yu gi oh

yu gi oh zexal season 4 watch episodes streaming online - Feb 12 2023

streaming rent or buy yu gi oh zexal season 4 you are able to buy yu gi oh zexal season 4 on apple tv as download

watch full length yu gi oh episodes online - Nov 09 2022

yu gi oh zexal s 3 ep 45 duration 21 23 the future of three worlds yu gi oh zexal s 3 ep 44 duration 21 36 the battle of three worlds yu gi oh zexal s 3 ep 43 duration 21 03 the fate of three worlds

zexal power yu gi oh wiki fandom - Jul 05 2022

zexal □□□ zearu is a miraculous force from the astral world in the yu gi oh zexal anime that is called upon by yuma tsukumo and astral combining them into a single being while being utilized the wielder is capable of performing the shining draw which allows them to create and draw cards

iv d team yu gi oh wiki fandom - Jan 31 2022

iv Ⅳ □□□ fō is a alternate incarnation of quattro a character from the yu gi oh zexal anime appearing in the yu gi oh d team zexal spin off manga he is currently the asian champion iv challenged team zexal as they were the winners of the team duel tournament where he easily managed to defeat tetsuo and takashi after winning he made fun of them

yu gi oh go rush wikipedia - Apr 02 2022

on december 17 2021 tv tokyo announced that yu gi oh go rush would premiere on april 3 2022 on tv tokyo and bs tv tokyo with key staff members from yu gi oh sevens returning for their respective positions nobuhiro kondo is directing the series at bridge toshimitsu takeuchi is in charge of series scripts and kazuko tadano and hiromi matsushita

yu gi oh zexal 4 bölüm türkçe altyazılı Çizgi film - Aug 18 2023

jan 27 2015 kabul ediyorum yuma yu gi oh zexal anime serisi nin ana karakteridir kişisel Özellikler yuma hırslı enerjik genç bir çocuk olarak rekabet içine girmeyi ve zor işlerde b

yu gi oh zexal 34 bölüm part 1 türkçe altyazılı Çizgi film - Sep 07 2022

jan 27 2015 yuma yu gi oh zexal anime serisi nin ana karakteridir kişisel Özellikler yuma hırslı enerjik genç bir çocuk olarak rekabet içine girmeyi ve zor işlerde b

yu gi oh zexal vikipedi - May 15 2023

yu gi oh zexal japonca □ □ □zexal romanize yūgiō zearu shin yoshida tarafından yazılan bir manga serisidir seri aralık 2010 haziran 2015 tarihleri arasında shueisha nın v jump dergisinde dokuz tankōbon cilt halinde yayınlandı

yu gi oh zexal wikipedia - Jan 11 2023

the first yu gi oh zexal sound duel 1 was released on september 28 2011 the second yu gi oh zexal sound duel 2 was released on september 19 2012 the third yu gi oh zexal sound duel 3 was released on may 15 2013 the fourth yu gi oh zexal sound duel 4 was released on november 13 2013 the fifth yu gi oh

yu gi oh zexal izle türkçe anime izle anizle - Sep 19 2023

yu gi oh serisinin 4 sezonuna karşılık gelen yapımdır yeni serimizin kahramanı yuma tsukumo her zaman meydan okumaya açık olan bir orta birinci sınıf öğrencisidir başına gelen bazı olaylar sebebiyle kendini okulun çete liderlerinin en büyüğü shark ile düelloda bulur

yu gi oh vikipedi - Dec 10 2022

yu gi oh zexal 2011 2014 dördüncü anime serisidir 148 bölümden oluşur xyz canavarları oyuna tanıtılır bknz yu gi oh zexal yu gi oh arc v 2014 2018 beşinci anime serisidir 220 bölümden oluşur pendulum canavarları ve pendulum kartı bölgelerini oyuna tanıtır

quattro yu gi oh wiki fandom - Mar 13 2023

quattro known as iv in the japanese version four in the italian version and born thomas arclight is a character appearing in the yu gi oh zexal anime he is a number hunter of the vetrix family and the current asian duel champion

zexal nyaa - Jul 17 2023

uraharashop yu gi oh zexal ii 31 104 mkv 463 4 mib 2013 07 04 14 57 0 0 0 ygo yu gi oh zexal ii 022 95 b654558b mkv 499 1 mib 2013 03 17 15 13 0 0 0 ozzc yu gi oh zexal 06 h264 480 720p 584 0 mib 2011 05 29 05 04 0 0 0 yu gi oh zexal 136 sub latino znf 180 1 mib 2014 02 09 14 50 0 0 0

official yu gi oh site watch full length yu gi oh episodes online - Aug 06 2022

the official site for all things yu gi oh watch full episodes from all four animated series get the latest news and find everything you would want to know about the characters cards and monsters of yu gi oh

yu gi oh zexal tv series 2011 2014 imdb - Jun 04 2022

rate animation action comedy yuma tsukumo must team up with an ethereal being connected to an ancient relic left to him by his parents in order to collect 99 number cards doing so will restore the lost memories of this being giving them the

yu gi oh zexal yu gi oh wiki fandom - Apr 14 2023

yu gi oh zexal sound duel 1 was released on september 28 2011 yu gi oh zexal sound duel 2 was released on september 19 2012 yu gi oh zexal sound duel 3 was released on may 15 2013 yu gi oh zexal sound duel 4 was released on november 13

2013 yu gi oh zexal sound duel 5 was released on november 19 2014 episodes

yu gi oh zexal tv series 2011 2014 episode list imdb - Oct 08 2022

s4 e4 rule duel october 28 2012 ray nominates yuma to run against caswell for the position of class representative but when the ray way takes a turn for the worse yuma finds himself facing off against a student council president who s been corrupted by the barians 6 6 10

list of yu gi oh zexal episodes wikipedia - Jun 16 2023

zexal □ □ □ zexal □□□ yūgiō zearu is the fourth spin off anime series in the yu gi oh franchise and the sixth anime series overall by nihon ad systems and tv tokyo it is directed by satoshi kuwahara and produced by studio gallop the series aired in japan on tv tokyo between april 11 2011 and september 24 2012 a second series yu gi oh