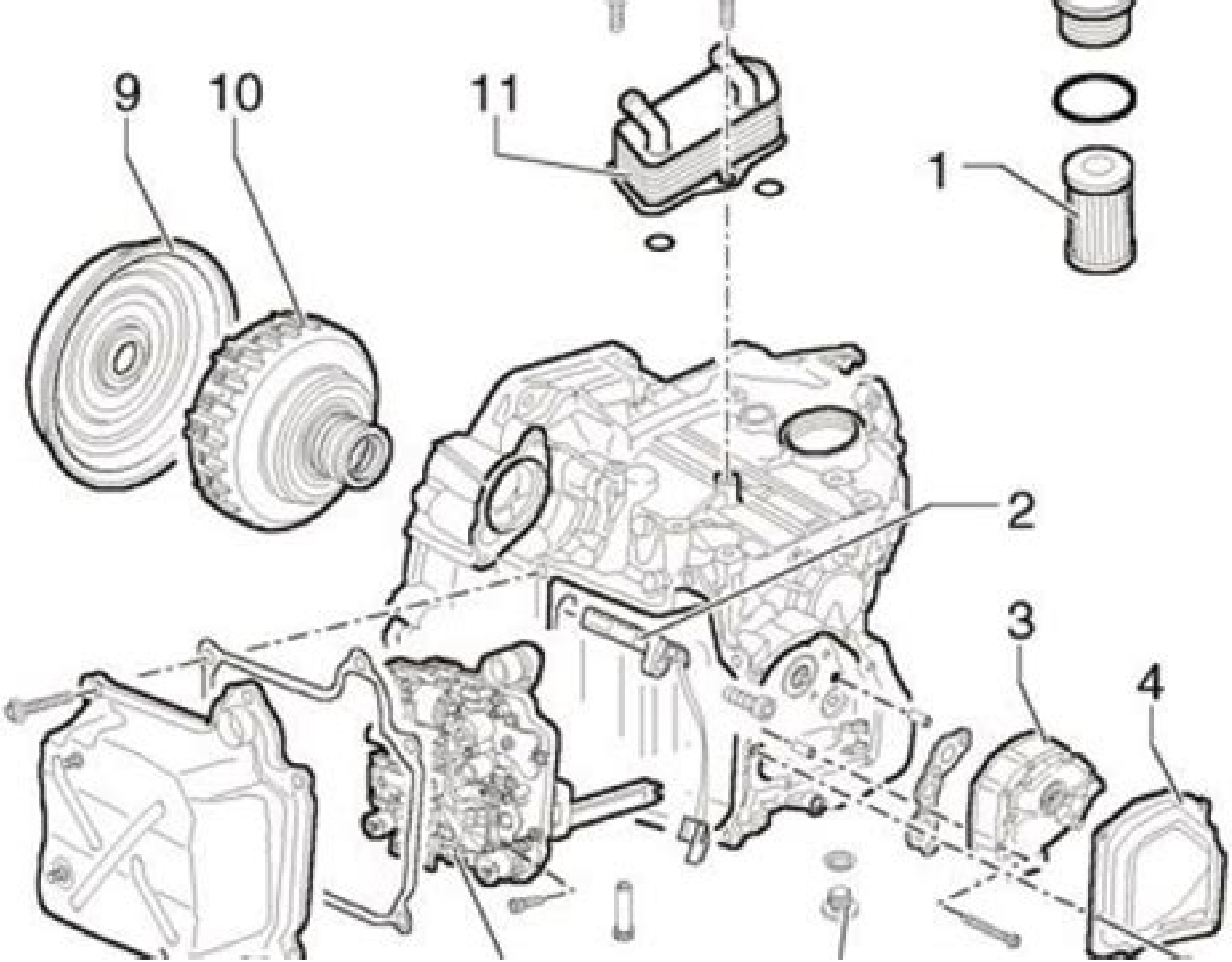
9
10
11
1
2
3
4

Vw Jetta Auto Transmission Repair Manual

Pasquale De Marco

Vw Jetta Auto Transmission Repair Manual:

Volkswagen Jetta, Golf, GTI, Cabrio Service Manual, 1993-1999 Bentley Publishers,Robert Bentley, inc,1999 Bentley Publishers is the exclusive factory authorized publisher of Volkswagen Service Manuals in the United States and Canada In every manual we provide full factory repair procedures specifications tolerances electrical wiring diagrams and lubrication and maintenance information Bentley manuals are the only complete authoritative source of Volkswagen maintenance and repair information Even if you never intend to service your car yourself you ll find that owning a Bentley Manual will help you to discuss repairs more intelligently with your service technician Volkswagen Golf and Jetta 1999-2006 Service Manual Pasquale De Marco,2025-07-23 The Volkswagen Golf and Jetta are two of the most popular cars on the road today They are known for their reliability performance and affordability If you own one of these vehicles you may be interested in learning how to service and repair it yourself This manual will provide you with the information you need to get started In this manual you will find step by step instructions for a variety of maintenance and repair procedures You will also find troubleshooting tips and diagnostic charts to help you identify and fix problems Whether you are a beginner or an experienced mechanic this manual will be a valuable resource Some of the topics covered in this manual include Basic maintenance Engine repair Transmission repair Suspension and steering repair Brake repair Electrical system repair Body and interior repair Climate control repair Fuel and exhaust system repair Safety systems repair This manual is written for the do it yourselfer It assumes that you have some basic mechanical skills and tools However even if you are a complete beginner you should be able to follow the instructions in this manual and successfully service and repair your Volkswagen Golf or Jetta Before you begin any work on your vehicle be sure to read and understand the safety precautions in this manual Also be sure to have the proper tools and equipment for the job If you are not comfortable performing a particular repair do not hesitate to take your vehicle to a qualified mechanic With the help of this manual you can save money on the cost of servicing and repairing your Volkswagen Golf or Jetta You can also learn more about your vehicle and how it works This knowledge will give you peace of mind when you are driving your Volkswagen If you like this book write a review Volkswagen GTI Golf-Jetta Service Manual, 1985-1992 Robert Bentley, inc,1992 New information covers the 2 0 liter 16V engine ABS troubleshooting service CIS E Motronic fuel injection Digifant I fuel injection with On Board Diagnosis ECO Diesel full manual transaxle rebuilding procedures A special Fundamentals section has been added to the beginning of the manual to help the owner understand the basics of automotive systems repair procedures The most comprehensive Golf manual available **The Owner's Manual for the Volkswagen Jetta, Golf, GTI: A Comprehensive Guide to Maintaining Your Volkswagen** Pasquale De Marco, The Owner s Manual for the Volkswagen Jetta Golf GTI A Comprehensive Guide to Maintaining Your Volkswagen This comprehensive guide provides everything you need to know about maintaining and repairing your Volkswagen Jetta Golf or GTI from basic maintenance tasks to more advanced repairs Whether you re a

seasoned DIYer or a complete novice this book will walk you through every step of the process with clear instructions and detailed illustrations You ll learn how to troubleshoot common problems diagnose and repair electrical issues and keep your Volkswagen running like new In addition to essential maintenance and repair procedures this book also covers performance modifications and upgrades You ll learn how to improve your Volkswagen s handling braking and acceleration and how to customize it to your own unique style With this book as your guide you ll have all the knowledge and skills you need to keep your Volkswagen Jetta Golf or GTI running smoothly for years to come Inside this book you will find Essential maintenance and repair procedures Troubleshooting common problems Diagnosing and repairing electrical issues Performance modifications and upgrades And much more Whether you re a seasoned Volkswagen enthusiast or a first time owner this book is your essential guide to keeping your car in top condition If you like this book write a review *Chilton's Import Car Repair Manual 1983-90* Chilton Automotive Books,1989-10 Maintenance specifications step by stept parts replacments

VW Golf & Jetta Automotive Repair Manual ,1997 Total Car Care is the most complete step by step automotive repair manual you ll ever use All repair procedures are supported by detailed specifications exploded views and photographs From the simplest repair procedure to the most complex trust Chilton s Total Car Care to give you everything you need to do the job Save time and money by doing it yourself with the confidence only a Chilton Repair Manual can provide *Chilton's Import Car Repair Manual, 1986* ,1985 **VW GTI, Golf, Jetta, MK III & IV** Kevin Clemens, Volkswagen s GTI Golf and Jetta are long time favorites among sport compact performance enthusiasts With engines ranging from the 2 0 liter naturally aspirated four cylinder to the 1 8 liter turbo 4 to the VR6 the Mk III and Mk IV generations 1993 2004 offer tuners a wealth of opportunities This book turns these opportunities into realities from deciding which vehicle to buy to keeping it running in tip top condition to enhancing the performance and appearance of your VW Focusing on the engine wheels and tires suspension body kits interiors and more each project includes straightforward instruction along with details about the necessary parts cost time and skill If you want to get the biggest bang for your VW buck this book is your road map

Volkswagen Rabbit/Jetta Diesel Service Manual, Including Pickup Truck and Turbo-diesel, 1977, 1978, 1979, 1980, 1981, 1982, 1983, 1984 Robert Bentley, inc,1984 Everything you need to troubleshoot service repair the diesel engine its direct cylinder fuel injection system This manual is just as thorough as our other two Rabbit Jetta Scirocco Pickup Truck service manuals but focuses exclusively on diesel models We eliminated information covering the gasoline engine fuel injection other subjects that don t apply to diesel engine models Removing this potentially confusing material allows us to cover particular features of the diesel models in greater depth You ll find testing troubleshooting repair steps for everything from diesel fuel injection adjustment to the oil cooler used on models with automatic transmission or Turbo Diesel engines *Subject Guide to Books in Print* ,2001

Fuel your quest for knowledge with Learn from is thought-provoking masterpiece, Explore **Vw Jetta Auto Transmission Repair Manual** . This educational ebook, conveniently sized in PDF (Download in PDF: *), is a gateway to personal growth and intellectual stimulation. Immerse yourself in the enriching content curated to cater to every eager mind. Download now and embark on a learning journey that promises to expand your horizons. .

https://ftp.barnabastoday.com/About/scholarship/Documents/Wolfgang_Borchert_Lesebuchgeschichten.pdf

Table of Contents Vw Jetta Auto Transmission Repair Manual

1. Understanding the eBook Vw Jetta Auto Transmission Repair Manual
    - The Rise of Digital Reading Vw Jetta Auto Transmission Repair Manual
    - Advantages of eBooks Over Traditional Books
2. Identifying Vw Jetta Auto Transmission Repair Manual
    - Exploring Different Genres
    - Considering Fiction vs. Non-Fiction
    - Determining Your Reading Goals
3. Choosing the Right eBook Platform
    - Popular eBook Platforms
    - Features to Look for in an Vw Jetta Auto Transmission Repair Manual
    - User-Friendly Interface
4. Exploring eBook Recommendations from Vw Jetta Auto Transmission Repair Manual
    - Personalized Recommendations
    - Vw Jetta Auto Transmission Repair Manual User Reviews and Ratings
    - Vw Jetta Auto Transmission Repair Manual and Bestseller Lists
5. Accessing Vw Jetta Auto Transmission Repair Manual Free and Paid eBooks
    - Vw Jetta Auto Transmission Repair Manual Public Domain eBooks
    - Vw Jetta Auto Transmission Repair Manual eBook Subscription Services
    - Vw Jetta Auto Transmission Repair Manual Budget-Friendly Options

6. Navigating Vw Jetta Auto Transmission Repair Manual eBook Formats
    - ePub, PDF, MOBI, and More
    - Vw Jetta Auto Transmission Repair Manual Compatibility with Devices
    - Vw Jetta Auto Transmission Repair Manual Enhanced eBook Features
7. Enhancing Your Reading Experience
    - Adjustable Fonts and Text Sizes of Vw Jetta Auto Transmission Repair Manual
    - Highlighting and Note-Taking Vw Jetta Auto Transmission Repair Manual
    - Interactive Elements Vw Jetta Auto Transmission Repair Manual
8. Staying Engaged with Vw Jetta Auto Transmission Repair Manual
    - Joining Online Reading Communities
    - Participating in Virtual Book Clubs
    - Following Authors and Publishers Vw Jetta Auto Transmission Repair Manual
9. Balancing eBooks and Physical Books Vw Jetta Auto Transmission Repair Manual
    - Benefits of a Digital Library
    - Creating a Diverse Reading Collection Vw Jetta Auto Transmission Repair Manual
10. Overcoming Reading Challenges
    - Dealing with Digital Eye Strain
    - Minimizing Distractions
    - Managing Screen Time
11. Cultivating a Reading Routine Vw Jetta Auto Transmission Repair Manual
    - Setting Reading Goals Vw Jetta Auto Transmission Repair Manual
    - Carving Out Dedicated Reading Time
12. Sourcing Reliable Information of Vw Jetta Auto Transmission Repair Manual
    - Fact-Checking eBook Content of Vw Jetta Auto Transmission Repair Manual
    - Distinguishing Credible Sources
13. Promoting Lifelong Learning
    - Utilizing eBooks for Skill Development
    - Exploring Educational eBooks
14. Embracing eBook Trends
    - Integration of Multimedia Elements

- Interactive and Gamified eBooks

Vw Jetta Auto Transmission Repair Manual Introduction

In the digital age, access to information has become easier than ever before. The ability to download Vw Jetta Auto Transmission Repair Manual has revolutionized the way we consume written content. Whether you are a student looking for course material, an avid reader searching for your next favorite book, or a professional seeking research papers, the option to download Vw Jetta Auto Transmission Repair Manual has opened up a world of possibilities. Downloading Vw Jetta Auto Transmission Repair Manual provides numerous advantages over physical copies of books and documents. Firstly, it is incredibly convenient. Gone are the days of carrying around heavy textbooks or bulky folders filled with papers. With the click of a button, you can gain immediate access to valuable resources on any device. This convenience allows for efficient studying, researching, and reading on the go. Moreover, the cost-effective nature of downloading Vw Jetta Auto Transmission Repair Manual has democratized knowledge. Traditional books and academic journals can be expensive, making it difficult for individuals with limited financial resources to access information. By offering free PDF downloads, publishers and authors are enabling a wider audience to benefit from their work. This inclusivity promotes equal opportunities for learning and personal growth. There are numerous websites and platforms where individuals can download Vw Jetta Auto Transmission Repair Manual. These websites range from academic databases offering research papers and journals to online libraries with an expansive collection of books from various genres. Many authors and publishers also upload their work to specific websites, granting readers access to their content without any charge. These platforms not only provide access to existing literature but also serve as an excellent platform for undiscovered authors to share their work with the world. However, it is essential to be cautious while downloading Vw Jetta Auto Transmission Repair Manual. Some websites may offer pirated or illegally obtained copies of copyrighted material. Engaging in such activities not only violates copyright laws but also undermines the efforts of authors, publishers, and researchers. To ensure ethical downloading, it is advisable to utilize reputable websites that prioritize the legal distribution of content. When downloading Vw Jetta Auto Transmission Repair Manual, users should also consider the potential security risks associated with online platforms. Malicious actors may exploit vulnerabilities in unprotected websites to distribute malware or steal personal information. To protect themselves, individuals should ensure their devices have reliable antivirus software installed and validate the legitimacy of the websites they are downloading from. In conclusion, the ability to download Vw Jetta Auto Transmission Repair Manual has transformed the way we access information. With the convenience, cost-effectiveness, and accessibility it offers, free PDF downloads have become a popular choice for students, researchers, and book lovers worldwide. However, it is crucial to engage in ethical downloading practices and prioritize personal security when utilizing online platforms. By doing so,

individuals can make the most of the vast array of free PDF resources available and embark on a journey of continuous learning and intellectual growth.

FAQs About Vw Jetta Auto Transmission Repair Manual Books

1. Where can I buy Vw Jetta Auto Transmission Repair Manual books? Bookstores: Physical bookstores like Barnes & Noble, Waterstones, and independent local stores. Online Retailers: Amazon, Book Depository, and various online bookstores offer a wide range of books in physical and digital formats.
2. What are the different book formats available? Hardcover: Sturdy and durable, usually more expensive. Paperback: Cheaper, lighter, and more portable than hardcovers. E-books: Digital books available for e-readers like Kindle or software like Apple Books, Kindle, and Google Play Books.
3. How do I choose a Vw Jetta Auto Transmission Repair Manual book to read? Genres: Consider the genre you enjoy (fiction, non-fiction, mystery, sci-fi, etc.). Recommendations: Ask friends, join book clubs, or explore online reviews and recommendations. Author: If you like a particular author, you might enjoy more of their work.
4. How do I take care of Vw Jetta Auto Transmission Repair Manual books? Storage: Keep them away from direct sunlight and in a dry environment. Handling: Avoid folding pages, use bookmarks, and handle them with clean hands. Cleaning: Gently dust the covers and pages occasionally.
5. Can I borrow books without buying them? Public Libraries: Local libraries offer a wide range of books for borrowing. Book Swaps: Community book exchanges or online platforms where people exchange books.
6. How can I track my reading progress or manage my book collection? Book Tracking Apps: Goodreads, LibraryThing, and Book Catalogue are popular apps for tracking your reading progress and managing book collections. Spreadsheets: You can create your own spreadsheet to track books read, ratings, and other details.
7. What are Vw Jetta Auto Transmission Repair Manual audiobooks, and where can I find them? Audiobooks: Audio recordings of books, perfect for listening while commuting or multitasking. Platforms: Audible, LibriVox, and Google Play Books offer a wide selection of audiobooks.
8. How do I support authors or the book industry? Buy Books: Purchase books from authors or independent bookstores. Reviews: Leave reviews on platforms like Goodreads or Amazon. Promotion: Share your favorite books on social media or recommend them to friends.
9. Are there book clubs or reading communities I can join? Local Clubs: Check for local book clubs in libraries or

community centers. Online Communities: Platforms like Goodreads have virtual book clubs and discussion groups.

10. Can I read Vw Jetta Auto Transmission Repair Manual books for free? Public Domain Books: Many classic books are available for free as theyre in the public domain. Free E-books: Some websites offer free e-books legally, like Project Gutenberg or Open Library.

Find Vw Jetta Auto Transmission Repair Manual :

wolfgang borchert lesebuchgeschichten
~~wissenswertes welt gummib ren wandkalender 2016~~
wolters tafels voor schoolgebruik
wireless security models threats and solutions
wm131a ford factory manual
womanpower womanpower
women after all sex evolution and the end of male supremacy
wissenschaftliche substantiierung gesundheitsbezogenen lebensmittel europ ischen
wnba open tryouts 2014
wizard and glass the dark tower iv on 18 audio cassette tapes
wolfieraps age
~~women armies and warfare in early modern europe~~
wireless lans jim geier
winning at interview a new way to succeed
wisconsin withholding guide for 2015

Vw Jetta Auto Transmission Repair Manual :

aircraft rescue and fire fighting 6th edition ifsta - Jul 06 2023
web shop for ifsta products rescue free shipping discover the best fire service training rescue at ifsta org
aircraft ifsta - May 04 2023
web jan 1 2001 ifsta 0 00 0 ratings0 reviews this study guide is designed to help the reader understand and remember the material presented in the 5th edition of aircraft rescue
ifsta aircraft rescue and firefighting 5th edition - Aug 27 2022

web ifsta aircraft rescue firefighting 5th edition whispering the strategies of language an mental quest through ifsta aircraft rescue firefighting 5th edition in a digitally

ifsta aircraft rescue and firefighting 5th edition 2022 - Jul 26 2022

web 2 ifsta aircraft rescue firefighting 5th edition 2022 05 31 ifsta aircraft rescue firefighting 5th edition downloaded from data northitalia com by guest hailey

aircraft rescue and fire fighting 5th edition amazon com - Sep 08 2023

web jan 1 2008 aircraft rescue and fire fighting 5th edition provides basic information needed by firefighters to effectively perform the various tasks involved in aircraft

ifsta aircraft rescue firefighting 5th edition lynne murnane book - Jan 20 2022

web ifsta aircraft rescue and firefighting 5th edition downloaded from ai classmonitor com by guest dorsey may fire and emergency services instructor international fire

rescue ifsta - Jun 05 2023

web shop for ifsta products aircraft free shipping discover the best fire service training aircraft at ifsta org

ifsta aircraft rescue firefighting 5th edition mx skylightframe - Sep 27 2022

web ifsta aircraft rescue and firefighting 5th edition aircraft rescue and fire fighting ifsta 9780879393236 aircraft rescue and fire fighting 6th edition ifsta by

ifsta aircraft rescue firefighting 5th edition - Mar 22 2022

web ifsta aircraft rescue firefighting 5th edition right here we have countless ebook ifsta aircraft rescue firefighting 5th edition and collections to check out we additionally

ifsta aircraft rescue and fire fighting 6th edition - Feb 01 2023

web we come up with the money for ifsta aircraft rescue firefighting 5th edition and numerous books collections from fictions to scientific research in any way in the middle

aircraft rescue and fire fighting study guide by - Mar 02 2023

web aircraft rescue fire fighting 6th edition instructor resource kit ifsta aircraft rescue fire fighting 6th edition instructor resource kit price 229 00 product

ifsta aircraft rescue firefighting 5th edition - May 24 2022

web 2 ifsta aircraft rescue firefighting 5th edition 2023 02 03 nfpa 472 and osha 1910 120 the 7th edition offers a complete support package including skill sheets

aircraft rescue and fire fighting study guide by ifsta - Apr 03 2023

web 31 skills videos free to stream on resourceone the newest edition of ifsta aircraft rescue and fire fighting arff includes 31

skills sheets these skills are available

ebook aircraft rescue and fire fighting 5th edition ifsta - Oct 09 2023

web ebook aircraft rescue and fire fighting 5th edition price 69 62 product type manual media type online isbn 978 0 87939 531 5 ifsta item 75086 quantity total

about ifsta ifsta - Apr 22 2022

web ifsta aircraft rescue and firefighting 5th edition quiz aircraft rescue and firefighting basic skills aircraft rescue and fire fighting 6th ed exam ifsta aircraft rescue

ifsta aircraft rescue and firefighting 5th edition copy - Nov 17 2021

epub download aircraft rescue and fire fighting full description - Oct 29 2022

web 2 ifsta aircraft rescue and firefighting 5th edition 2022 02 23 resource management the second edition also reflects the latest developments in building a personal

ifsta aircraft rescue firefighting 5th edition lynne murnane - Nov 29 2022

web aircraft rescue and fire fighting fire department responsibility in protecting evidence at the scene of an aircraft accident guide for aircraft rescue and fire fighting

aircraft rescue fire fighting 6th edition instructor ifsta - Dec 31 2022

web aug 17 2020 aircraft rescue and fire fighting addresses the requirements of nfpar 1003 standard for airport fire fighter professional qualifications 2005 edition

ebook aircraft rescue fire fighting 6th edition ifsta - Dec 19 2021

ifsta aircraft rescue and firefighting 5th edition 2023 - Feb 18 2022

web ebook aircraft rescue fire fighting 6th edition this product is the ebook version of the print textbook aircraft rescue fire fighting 6th edition click here to read a full

ifsta aircraft rescue firefighting 5th edition download only deju - Jun 24 2022

web about ifsta the international fire service training association ifsta was established in 1934 the mission of ifsta is to identify areas of need for training materials and foster

aircraft rescue and fire fighting 5th edition - Aug 07 2023

web feb 2 2021 aircraft rescue and fire fighting 5th edition by ifsta aircraft rescue and fire fighting 5th edition provides basic information needed by firefighters to

tutorials in introductory physics homework pdf - Aug 03 2023

web for the most part the tutorials are intended to be used after concepts have been introduced in the lectures and the laboratory although most can serve to introduce the topic as well the tutorials comprise an integrated system of pretests worksheets homework assignments and post tests

american association of physics teachers aapt org - Feb 26 2023

web american association of physics teachers aapt org

tutorials in introductory physics homework lillian c mcdermott - Jan 28 2023

web tutorials in introductory physics homework volume 2 of tutorials in introductory physics university of washington physics education group author lillian c mcdermott contributor university of washington physics education group publisher learning solutions 2010 isbn 0558846025 9780558846022 export citation

tutorials in introductory physics and homework package mcdermott - Jul 22 2022

web this landmark book presents a series of physics tutorials designed by a leading physics education research group emphasizing the development of concepts and scientific reasoning skills the tutorials focus on common conceptual and reasoning difficulties

tutorials in introductory physics mcdermott lillian c free - Dec 27 2022

web a set of instructional materials intended to supplement the lectures and textbook of a standard introductory physics course v 1 without special title v 2 homework

tutorials in introductory physics mcdermott solutions download - Apr 18 2022

web introductory physics at the university of colorado self educating in physics undergrad physics textbooks vs grad physics textbooks problem solving in physics self paced learning tool for physics physics education dr lillian mcdermott research in physics education a resource for improving student learning when a physics teacher knows

tutorials in introductory physics and homework package mcdermott - Sep 23 2022

web tutorials in introductory physics and homework package mcdermott lillian shaffer peter amazon ca books

search pearson - Nov 25 2022

web results for mc dermott tutorials in introductory physics and homework package

tutorials in introductory physics 1st edition solutions quizlet - Oct 05 2023

web now with expert verified solutions from tutorials in introductory physics 1st edition you ll learn how to solve your toughest homework problems our resource for tutorials in introductory physics includes answers to chapter exercises as well as detailed information to walk you through the process step by step

tutorials in introductory physics mcdermott solutions optics - Feb 14 2022

web tutorials in introductory physics mcdermott solutions optics responsive teaching in science and mathematics team based

learning tutorials in introductory physics homework national academies press climate change is one of the most controversial and misunderstood issues of the 21st century

tutorials introductory physics homework by lillian mcdermott - Jun 20 2022

web tutorials in introductory physics homework by lillian c mcdermott peter s shaffer and a great selection of related books art and collectibles available now at abebooks com

tutorials in introductory physics lillian c mcdermott peter s - Mar 30 2023

web lillian c mcdermott peter s shaffer university of washington physics education group prentice hall 1998 science 224 pages this landmark book presents a series of physics tutorials designed by a leading physics education researcher

tutorials in introductory physics amazon com - Apr 30 2023

web jan 1 2001 tutorials in introductory physics by lillian c mcdermott author peter s shaffer author 4 0 155 ratings see all formats and editions paperback 25 12 13 used from 23 95 this landmark book presents a series of physics tutorials designed by a leading physics education research group

tutorials in introductory physics and homework package 1st - Jun 01 2023

web step by step solution step 1 of 2 the direction of change in velocity vector is in the direction of acceleration acceleration will be constant in magnitude in all process let the velocity vectors are at a point before the turnaround and another is after turn around the diagram of the velocity vectors is step 2 of 2

mcdermott tutorials introductory physics homework solutions - May 20 2022

web homework solutions mathcad for introductory physics dec 12 2020 designed as a supplement to any introductory physics text mathcad r for introductory physics shows students how to model physics problems on the computer using the powerful mathcad r software program the power of the computer allows introductory physics students to

tutorials in introductory physics 1st edition textbook solutions - Jul 02 2023

web textbook solutions for tutorials in introductory physics 1st edition peter s shaffer and others in this series view step by step homework solutions for your homework ask our subject experts for help answering any of your homework questions

tutorials in introductory physics pdf document - Oct 25 2022

web tutorial homework reinforces and extends what is covered in the worksheets for the tutorials to iii page 5 tutorials in introductory physics mcdermott shaffer p e g u wash prentice hall inc first edition 2002 em 103 page 109 em a model for circuits part 2 potential difference 104

tutorials in introductory physics by lillian c mcdermott open - Aug 23 2022

web tutorials in intro physics and homework pkg by lillian c mcdermott peter s shaffer october 2002 prentice hall college div edition tutorials in introductory physics by lillian c mcdermott open library

tutorials in introductory physics 1st edition solutions quizlet - Sep 04 2023
web now with expert verified solutions from tutorials in introductory physics 1st edition you ll learn how to solve your toughest homework problems our resource for tutorials in introductory physics includes answers to chapter exercises as well as detailed information to walk you through the process step by step

tutorials in introductory physics solutions manual mcdermott - Mar 18 2022
web tutorials in introductory physics solutions manual mcdermott author blogs sites post gazette com 2023 01 14t00 00 00 00 01 subject tutorials in introductory physics solutions manual mcdermott keywords tutorials in introductory physics solutions manual mcdermott created date 1 14 2023 5 10 21 am

mems and microsystems design manufacture and nanoscale - Nov 18 2021
web mems and microsystems design manufacture and nanoscale engineering 2nd edition tai ran hsu description technology engineering mechanical bestselling mems

semiconductor research on 200 300 mm wafers in the heart of - Dec 20 2021
web jul 16 2020 technology engineering mechanical a bestselling mems text now better than ever an engineering design approach to microelectromechanical systems mems

pdf mems and microsystems design - Oct 30 2022
web in this research paper we have proposed a new type of capacitive shunt rf mems switch microelectro mechanical system mems is a combination of mechanical and

what is mems technology mems exchange org - Jan 21 2022
web nov 9 2023 modern electronics developments require state of the art technologies and manufacturing processes which are a financial challenge for many companies located

design manufacture and nanoscale engineering worldcat org - Feb 02 2023
web chapter 1 overview of mems and microsystems 1 1 mems and microsystem 1 2 typical mems and microsystems products 1 3 evolution of microfabrication 1 4

post cmos processing challenges and design developments of - Apr 23 2022
web nov 10 2023 in the last few years the manufacturing of microelectromechanical systems mems by means of innovative tridimensional and bidimensional printing technologies

hsu mems and microsystems design manufacture and - Mar 03 2023
web welcome to the web site for mems microsystems design manufacture and nanoscale engineering 2nd edition by tai ran hsu this web site gives you access to

mems microsystems design and manufacture academia edu - Sep 16 2021

mems and microsystems design and manufacture google books - Aug 28 2022
web mar 17 2008 mems and microsystems design manufacture and nanoscale engineering hsu tai ran on amazon com free shipping on qualifying offers
mems microsystems design and manufacture archive org - Jan 01 2023
web mems microsystems design and manufacture by hsu tai ran publication date 2004 publisher new delhi tata mcgraw hill collection printdisabled
mems and microsystems design and manufacture semantic - Jun 06 2023
web dec 1 2001 tldr a historical perspective of the origin and development of mems is presented as well as the traditional and innovative fabrication techniques and several of
wiley mems and microsystems design manufacture and - Apr 04 2023
web mems and microsystems design manufacture and nanoscale engineering 2nd edition to purchase this product please visit wiley com en au 9781119771166
mems microsystems design and manufacture tai ran hsu - Sep 28 2022
web mems and microsystems design and manufacture mems and microsystems tai ran hsu mcgraw hill 2002 microelectromechanical systems 436 pages
mems and microsystems design manufacture and - Aug 08 2023
web mar 17 2008 technology engineering mechanical a bestselling mems text now better than ever an engineering design approach to microelectromechanical systems mems
mems and microsystems design manufacture and nanoscale - Jul 27 2022
web jan 1 2008 mems microelectromechanical system a pioneer technology for miniaturization hsu 2008 is any engineering system that performs electrical and
pdf mems and microsystems design manufacture and - Sep 09 2023
web mar 17 2008 chapter 1 overview of mems and microsystems 1 1 mems and microsystem 1 2 typical mems and microsystems products 1 3 evolution of
mems microsystems design manufacture and nanoscale - Jun 25 2022
web jan 1 2002 modeling and design of mems accelerometer to detect vibrations on chest wall dating back to 1954 the field of microelectromechanical systems mems has
mems and microsystems design and manufacture - Oct 10 2023
web mar 22 2021 mems microelectromechanical system any engineering system that performs electrical and mechanical functions with components in micrometers is a

mems micro electromechanical systems techtarget - Feb 19 2022
web what is mems technology micro electro mechanical systems or mems is a technology that in its most general form can be defined as miniaturized mechanical and electro
mems and microsystems design and manufacture request - May 25 2022
web nov 6 2023 the integration of nanomaterials into microsystems enables a medium of sensing various gases 1 2 3 bioagents 4 5 chemicals 6 environmental contaminants 7
mems and microsystems design and manufacture google books - Nov 30 2022
web mems and microsystems design and manufacture tai ran hsu mcgraw hill 2002 microelectromechanical systems 436 pages microsystems and mems technology is
mems and microsystems design manufacture and nanoscale - Jul 07 2023
web mar 17 2008 technology engineering mechanical a bestselling mems text now better than ever an engineering design approach to microelectromechanical systems mems
wiley mems and microsystems design manufacture and - Oct 18 2021
web lectures on mems and microsystems design and manufacture tai ran hsu asme fellow professor microsystems design and packaging laboratory department
mems and microsystems design manufacture and - May 05 2023
web technology engineering mechanical a bestselling mems text now better than ever an engineering design approach to microelectromechanical systems mems and
micromachines free full text printing mems application of - Mar 23 2022
web mems micro electromechanical systems a mems microelectromechanical system is a miniature machine that has both mechanical and electronic components the physical